PYRO-SAFE® Flammotect OSI

One-sided installation

Installation instructions

Combination penetration sealing system made of mineral fibre boards and an ablation coating for one-sided installation in shaft walls, plasterboard walls, solid walls and floors for electrical cables and lines of all types, electrical conduits, combustible/non-combustible pipes and other configurations.
Maximum fire rating EI 120 according to EN 13501-2 as per ETA-22/0052

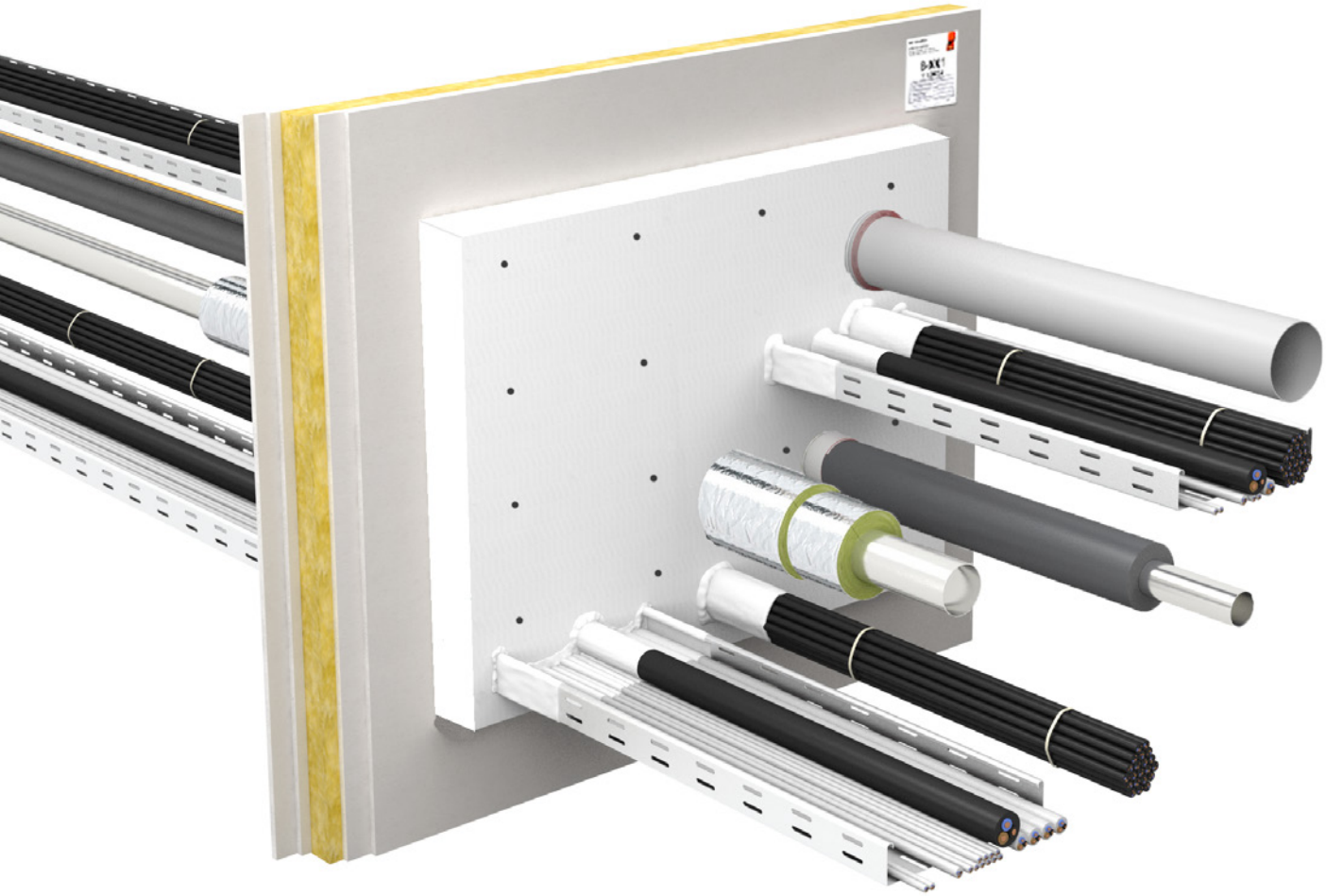

Installation Instructions Rev.: 23.05

svt Brandschutz Vertriebsgesellschaft mbH International • Gluesinger Strasse 86 • 21217 Seevetal, Germany • T +49 4105-40 90 0 • F +49 4105-40 90 32 • www.svt.de • info@svt.de

PYRO-SAFE® Flammotect OSI

Table of contents

PYRO-SAFE® Flammotect OSI

1. Preliminary remarks / overview

1.1 Target group

- The installation instructions are intended solely for personnel trained in fire protection.

1.2 Use of the instructions

- Before starting work, read through these instructions completely once. Pay particular attention to the following safety instructions.
- The authorisation holder assumes no liability for damage caused by failure to comply with these instructions.
- Pictorial representations serve as examples only. Installation results may differ in appearance.
- Unless stated otherwise, all lengths are specified in mm.
- All information in this document represents the state of the art at the time of writing or the current version of the standard.
  Upon request, svt will be pleased to provide the relevant legal and technical framework and manufacturer specifications for each individual case.
-

1.3 Safety instructions

- The safety data sheets must be consulted when processing the penetration seal components.
- Personal protective equipment:

	Wear protective clothing and non-slip shoes.
	Use safety goggles.
	P2 particle filter in case of short-term or low level exposure. For intensive or prolonged exposure use a breathing apparatus with independent air supply. Use breathing protection in compliance with international/national standards.
	Use chemically resistant gloves. Recommended materials: Butyl rubber, nitrile rubber, fluorinated rubber, PVC.

Safety instructions for the installation of floor penetration seals

	The area below the floor penetration seal must be cordoned off against entry during penetration seal work (barrier tape and warning sign: warning of possible falling objects, do not enter the area, penetration seal work in floor component openings).
	The contractor for the production of floor penetration seals must inform the client in writing (for forwarding to the client or appointed representative) that after the production of the fire penetration seals in floors, these must be secured on site against loads, in particular against walking, by suitable measures (e.g. by fencing or by covering with grating).

PYRO-SAFE® Flammotect OSI

1.4 Field of application

The usability of the combination penetration sealing system "PYRO-SAFE® Flammotect OSI" has been assessed as per ETAG 026-2 as regards the characteristics of "reaction to fire", "fire resistance", "release of hazardous substances" and "durability and suitability for use".

Reaction to fire

The ablative component "PYRO-SAFE® FLAMMOTECT-A" fulfils Class E of reaction to fire according to EN 13501-1, the insulating material "PYRO-SAFE® DG-CR" fulfils Class C-s1, d0 of reaction to fire according to EN 13501-1; the mineral fibre boards "Hardrock 040" and the mineral fibre mats "Klimarock lamella mat" fulfil Class A1 of reaction to fire according to EN 13501-1.

Fire resistance

"PYRO-SAFE® Flammotect OSI" meets the maximum requirements of Class EI 120 according to EN 13501-2. The fire rating EI 120-U/U also covers all other possible endings (C/U, U/C and C/C) according to EN 13501-2. The specified fire rating EI-120-C/U also covers the class with the same fire resistance duration with the ending -C/C as per EN 13501-2. The –U/C configuration is also valid for –C/U and -C/C according to EN 13501-2.

When installed in walls or floors with a lower fire resistance duration, the fire resistance duration of the penetration is also reduced to that of the fire resistance rating of the wall or ceiling.

Release of dangerous substances

None

Durability and suitability for use

The "PYRO-SAFE® FLAMMOTECT-A“ ablative components and the "PYRO-SAFE® DG-CR SK" intumescent fire protection fabric meet the requirements of type X for durability according to EOTA TR 024. PYRO-SAFE® Flammotect OSI can be subjected to the conditions of interior rooms with and without exposure to moisture and outdoor exposure, with no substantive changes to the fire protection characteristics to be expected.

PYRO-SAFE® Flammotect OSI

1.5 Components

Plasterboard walls with steel substructure

In stud design and double-sided cladding with at least 2 layers of 12.5 mm cement or gypsum-bound building boards with a reaction to fire of Class A1 or A2 according to EN 13501-1.

The stud structure must be supplemented with additional wall studs and transoms so that these form the reveal of the wall opening.

The walls must be classified for the required fire resistance rating according to EN 13501-2.

Plasterboard walls with wood substructure

In stud design and double-sided cladding with at least 2 layers of 12.5 mm cement or gypsum-bound building boards with a reaction to fire of Class A1 or A2 according to EN 13501-1.

The distance between the opening and the studs and transoms must be 100 mm ≥ and the hollow spaces between the cladding of the wall, studs and transoms and the opening reveal must be tightly sealed to a depth of 100 mm ≥ with mineral wool, reaction to fire Class A1 or A2 according to EN 13501-1.

The walls must be classified for the required fire resistance rating according to EN 13501-2.

Opening reveal cladding for plasterboard walls

Circumferentially according to the structure of the respective wall panelling, at least one layer of 12.5 mm thick cement- or gypsum-bound building boards with a reaction to fire of Class A1 or A2 according to EN 13501-1.

Shaft walls with steel substructure

In stud design with metal substructure and single-sided cladding with at least 2 layers of 20 mm thick building boards (Glasroc F 20, type GM-FH2 according to DIN EN 15283-1).

Solid walls

Of masonry, concrete, reinforced concrete, cellular concrete, ceramic bricks, hollow bricks or lattice bricks with a density of ≥ 450 kg/m³.

The walls must be classified for the required fire resistance rating according to EN 13501-2.

Solid floors

Of concrete, reinforced concrete or cellular concrete with a density of ≥ 550 kg/m³. The floors must be classified for the required fire resistance rating according to EN 13501-2.

PYRO-SAFE® Flammotect OSI

1.6 Field of application (component and penetration seal thicknesses, penetration seal distances)

Dimensions					
Item	**Name**		**Shaft wall [mm]**	**Plasterboard wall / solid wall [mm]**	**Floor [mm]**
A	Component thickness		≥ 40	≥ 100	≥ 150
B	Penetration seal thickness	2-layer design	≥ 100	≥ 100	≥ 100
		3-layer design	≥ 150	≥ 150	≥ 150
C	Maximum dimensions of the component opening (width x height)	2-layer design	450 x 370	1,175 x 800	1,200 x 1,100
		3-layer design			600 x 1,100
D	Distance to other openings or installations		≥ 200	≥ 200	≥ 200

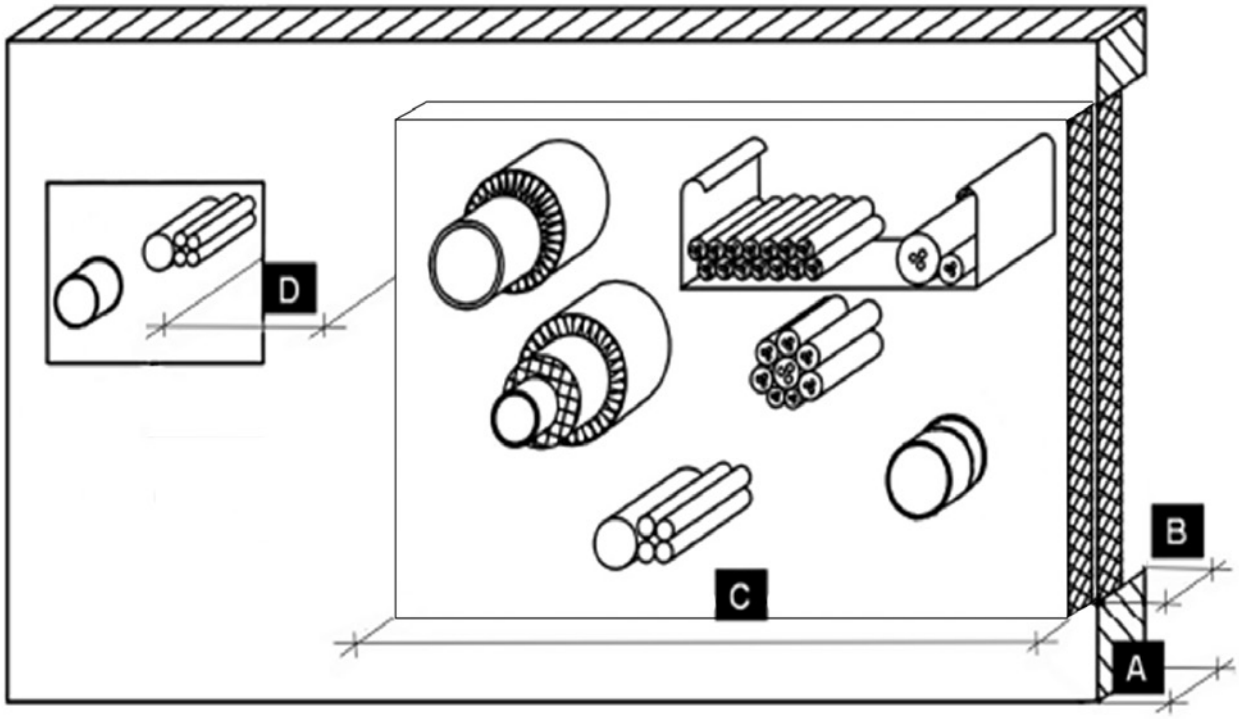

The total permissible cross-section of the installations (external dimensions) is ≤ 60% of the opening in the rough opening!

PYRO-SAFE® Flammotect OSI

1.7 Used products

PYRO-SAFE® FLAMMOTECT-A
Coating

12.5 kg pail – Art. no. 01155101
15.0 kg pail – Art. no. 01155105

PYRO-SAFE® FLAMMOTECT-A
Solid emulsion

12.5 kg pail – Art. no. 01155106
15.0 kg pail – Art. no. 01155107

PYRO-SAFE® FLAMMOTECT-A
Filler

12.5 kg pail – Art. no. 01155104
15.0 kg pail – Art. no. 01155109

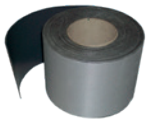

PYRO-SAFE® DG-CR 1.5
Fire protection wrap

Roll of 10 m x 125 mm – Art. no. 01261125

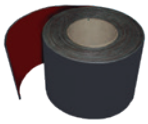

PYRO-SAFE® DG-CR BS
Fire protection wrap

Roll of 10 m x 100 mm – Art. no. 01264100

Mineral fibre board acc. to EN 13162

Criteria: volume weight ≥ 150 kg/m³
Reaction to fire Class A1 acc. to EN 13501:1
Melting point ≥ 1,000°C.
(TR10) Tensile strength perpendicular to board plane
≥ 10 kPa according to EN1607
Thickness ≥ 60 mm

Mineral fibre boards

One-side pre-coated with PYRO-SAFE® FLAMMOTECT-A

Format 1,000 x 600 x 60 mm
Pasteboard 4 pcs – Art. no. 01181160

Mineral wool A1

Class of reaction to fire in accordance with EN 13501-1: A1
Melting point ≥ 1,000 °C

10 kg bag – Art. no. 01183000

Lamella mat "ROCKWOOL"

according to DIN EN 14303 and LE DE0628071802 dated 2018-07-13

Class of reaction to fire in accordance with EN 13501-1: A1
Dimensions 610 x 50 cm
Thickness 30 mm

Roll of 3.05 m² – Art. no. 01187100

Alternatively, lamella mats, mineral fibre mats/ pipe sleeves may be used if they meet the following criteria:

EN 14303 volume weight ≥ 40 kg/m³
Reaction to fire Class A1 in accordance with EN 13501-1 Thickness ≥ 30 mm

Sectional and protective insulation

made of flexible elastomer foam (FEF) according to DIN EN 14304

Name	DIN/ abZ/abP
NH/Armaflex	DIN EN 14304

Label

1 piece – Art. no. 01229000

Coarse thread drywall screws

Screws Ø:	8.0 mm
Screw length:	100 mm
Thread length:	≥ 60 mm

Recommended tools

spatula, brush, crepe tape
mat knife and saw

possibly foil, folding ladder, wire tying pliers, galvanised steel wire

1.7.1 Declarations of Performance

The Declarations of Performance for featured svt products are available for download on our website:
https://svt-global.com/downloads

PYRO-SAFE® Flammotect OSI

1.8 Fire ratings

1.8.1 Installation in shaft walls

1.8.1.1 2-layer penetration sealing system

Fire ratings

	Measure	Wall		Floor	
		Fire rating	Source*	Fire rating	Source*
Cables, cable bundles and cable support systems with "PYRO-SAFE® FLAMMOTECT-A" coating					
Cable Ø ≤ 21 mm	≥ 150 mm, TSD ≥ 1 mm	**EI 90 / E 120**	**1**	**-**	
Cable bundle Ø ≤ 100 mm	≥ 150 mm, TSD ≥ 1 mm	**EI 120**	**1**	**-**	
Cables, cable bundles and cable support systems with fire protection wrap "PYRO-SAFE® DG-CR 1.5" – wrapping width 125 mm					
Cable Ø ≤ 21 mm	1x 1-layer, 40-60 mm overlap	**EI 120**	**1**	**-**	
Cable bundle Ø ≤ 100 mm	1x 1-layer, 40-60 mm overlap	**EI 90 / E 120**	**1**	**-**	
Electrical conduits with fire protection wrap "PYRO-SAFE® DG-CR 1.5" – wrapping width 125 mm					
Electrical conduit individual Ø ≤ 32 mm	2x 2-layer	**EI 120 U/U**	**1**	**-**	
Electrical conduit bundled Ø ≤ 100 mm	2x 2-layer	**EI 120 U/U**	**1**	**-**	
"Speed pipes" bundled or individual, with/without glass fibre cable, with fire protection wrap "PYRO-SAFE® DG-CR 1.5" – wrapping width 125 mm					
Max. 24 pcs pipe outer Ø ≤ 7 Max. 7 pcs pipe outer Ø ≤ 10 Max. 5 pcs pipe outer Ø ≤ 12	2x 2-layer	**EI 120 U/U**	**1**	**-**	
Special duo coax bundle with "PYRO-SAFE® FLAMMOTECT-A" coating					
Bundle Ø ≤ 90 mm / cable Ø ≤ 14 mm	≥ 150 mm, TSD ≥ 1 mm	**EI 120**	**1**	**-**	

* 1 → KB 02423.2/15/Z00NZP, 2 → KB 02423.3/15/Z00NZP, 3 → KB 02423.4/15/Z00NZP, 4 → KB 02423.5/15/Z00NZP, 5 → KB 02423.6/15/Z00NZP,
6 → Techn. Opinion No. 02423.7/15/Z00NZP, 7 → Techn. Opinion No. 02423.8/15/Z00NZP, 8 → Techn. Opinion No. 02423.9/15/Z00NZP, 9 → Techn. Opinion No. 01012/19/Z00NZP

1.8.1.2 3-layer penetration sealing system

Fire ratings

	Measure	Wall		Floor	
		Fire rating	Source*	Fire rating	Source*
Cables, cable bundles and cable support systems with fire protection wrap "PYRO-SAFE® DG-CR 1.5" – wrapping width 125 mm					
Cable Ø ≤ 21 mm	1x 1-layer, 40-60 mm overlap	**EI 120**	**2**	**-**	
Cable Ø ≤ 50 mm	1x 1-layer, 45-60 mm overlap	**EI 90 / E 120**	**2**	**-**	
Cable Ø ≤ 80 mm	1x 1-layer, 45-60 mm overlap	**EI 90 / E 120**	**2**	**-**	
Cable bundle Ø ≤ 100 mm	1x 1-layer, 45-60 mm overlap	**EI 120**	**2**	**-**	

* 1 → KB 02423.2/15/Z00NZP, 2 → KB 02423.3/15/Z00NZP, 3 → KB 02423.4/15/Z00NZP, 4 → KB 02423.5/15/Z00NZP, 5 → KB 02423.6/15/Z00NZP,
6 → Techn. Opinion No. 02423.7/15/Z00NZP, 7 → Techn. Opinion No. 02423.8/15/Z00NZP, 8 → Techn. Opinion No. 02423.9/15/Z00NZP, 9 → Techn. Opinion No. 01012/19/Z00NZP

PYRO-SAFE® Flammotect OSI

1.8.2 Installation in plasterboard walls and solid walls

1.8.2.1 2-layer penetration sealing system

Fire ratings					
	Measure	Wall		Floor	
		Fire rating	Source*	Fire rating	Source*
Cables, cable bundles and cable support systems with "PYRO-SAFE® FLAMMOTECT-A" coating					
Cable Ø ≤ 21 mm	≥ 150 mm, TSD ≥ 1 mm	**EI 90 / E 120**	**9**	**-**	
Cable bundle Ø ≤ 100 mm	≥ 150 mm, TSD ≥ 1 mm	**EI 120**	**9**	**-**	
Cables, cable bundles and cable support systems with fire protection wrap "PYRO-SAFE® DG-CR 1.5" – wrapping width 125 mm					
Cable Ø ≤ 21 mm	1x 1-layer, 40-60 mm overlap	**EI 120**	**9**	**-**	
Cable bundle Ø ≤ 100 mm	1x 1-layer, 40-60 mm overlap	**EI 90 / E 120**	**9**	**-**	
Electrical conduits with fire protection wrap "PYRO-SAFE® DG-CR 1.5" – wrapping width 125 mm					
Electrical conduit individual Ø ≤ 32 mm	2x 2-layer	**EI 120 U/U**	**9**	**-**	
Electrical conduit bundled Ø ≤ 100 mm	2x 2-layer	**EI 120 U/U**	**9**	**-**	
"Speed pipes" bundled or individual, with/without glass fibre cable, with fire protection wrap "PYRO-SAFE® DG-CR 1.5" – wrapping width 125 mm					
Max. 24 pcs pipe outer Ø ≤ 7 Max. 7 pcs pipe outer Ø ≤ 10 Max. 5 pcs pipe outer Ø ≤ 12	2x 2-layer	**EI 120 U/U**	**9**	**-**	
Special duo coax bundle with "PYRO-SAFE® FLAMMOTECT-A" coating					
Bundle Ø ≤ 90 mm / cable Ø ≤ 14 mm	≥ 150 mm, TSD ≥ 1 mm	**EI 120 U/U**	**9**	**-**	

* 1 → KB 02423.2/15/Z00NZP, 2 → KB 02423.3/15/Z00NZP, 3 → KB 02423.4/15/Z00NZP, 4 → KB 02423.5/15/Z00NZP, 5 → KB 02423.6/15/Z00NZP, 6 → Techn. Opinion No. 02423.7/15/Z00NZP, 7 → Techn. Opinion No. 02423.8/15/Z00NZP, 8 → Techn. Opinion No. 02423.9/15/Z00NZP, 9 → Techn. Opinion No. 01012/19/Z00NZP

1.8.2.2 3-layer penetration sealing system

Fire ratings					
	Measure	Wall		Floor	
		Fire rating	Source*	Fire rating	Source*
Cables, cable bundles and cable support systems with "PYRO-SAFE® FLAMMOTECT-A" coating					
Cable Ø ≤ 21 mm	≥ 150 mm, TSD ≥ 1 mm	**EI 120**	**3**	**-**	
Cable Ø ≤ 50 mm	≥ 150 mm, TSD ≥ 1 mm	**EI 90 / E 120**	**3**	**-**	
Cable Ø ≤ 80 mm	≥ 150 mm, TSD ≥ 1 mm	**EI 90 / E 120**	**3**	**-**	
Cable bundle Ø ≤ 100 mm	≥ 150 mm, TSD ≥ 1 mm	**EI 120**	**3**	**-**	
Cables, cable bundles and cable support systems with fire protection wrap "PYRO-SAFE® DG-CR 1.5" – wrapping width 125 mm					
Cable Ø ≤ 21 mm	1x 1-layer, 45-60 mm overlap	**EI 120**	**3**	**-**	
Cable Ø ≤ 50 mm	1x 1-layer, 40-60 mm overlap	**EI 90 / E 120**	**3**	**-**	
Cable Ø ≤ 80 mm	1x 1-layer, 40-60 mm overlap	**EI 90 / E 120**	**3**	**-**	
Cable bundle Ø ≤ 100 mm	1x 1-layer, 40-60 mm overlap	**EI 120**	**3**	**-**	
Electrical conduits with fire protection wrap "PYRO-SAFE® DG-CR 1.5" – wrapping width 125 mm					
Electrical conduit individual Ø ≤ 32 mm	2x 2-layer	**EI 120 U/U**	**8**	**-**	
Electrical conduit bundled Ø ≤ 100 mm	2x 2-layer	**EI 120 U/U**	**8**	**-**	
"Speed pipes" bundled or individual, with/without glass fibre cable, with fire protection wrap "PYRO-SAFE® DG-CR 1.5" – wrapping width 125 mm					
Max. 24 pcs pipe outside Ø ≤ 7 Max. 7 pcs pipe outer Ø ≤ 10 Max. 5 pcs pipe outer Ø ≤ 12	2x 2-layer	**EI 120 U/U**	**8**	**-**	

PYRO-SAFE® Flammotect OSI

Fire ratings

	Measure	Wall		Floor	
		Fire rating	Source*	Fire rating	Source*
Special duo coax bundle with "PYRO-SAFE® FLAMMOTECT-A" coating					
Bundle Ø ≤ 90 mm / cable Ø ≤ 14 mm	≥ 150 mm, TSD ≥ 1 mm	**EI 120 U/U**	**8**	**-**	
Combustible PVC-U, PVC-C pipes with intumescent "PYRO-SAFE® DG-CR BS" wrap - wrapping width 100 mm					
Pipe outer Ø ≤ 50 mm	2x 1-layer	**EI 120 U/U**	**3**	**-**	
Pipe outer Ø ≤ 70 mm	2x 2-layer	**EI 120 U/U**	**3**	**-**	
Pipe outer Ø ≤ 110 mm	2x 3-layer	**EI 120 U/U**	**3**	**-**	
Non-combustible pipes made of copper, steel, stainless steel or cast iron with combustible insulation "NH/Armaflex", with fire protection wrap "PYRO-SAFE® DG-CR 1.5" – wrapping width 125 mm					
Pipe outer Ø ≤ 15.0 mm	≥ 550 / 800 mm per side x 13 - 25 mm + wrap 2x 1-layer	**EI 120 C/U**	**3**	**-**	
Pipe outer Ø ≤ 28.0 mm	≥ 550 / 800 mm per side x 19 - 25 mm + wrap 2x 1-layer	**EI 120 C/U**	**3**	**-**	
Pipe outer Ø ≤ 42.0 mm	≥ 550 / 800 mm per side x 19 - 25 mm + wrap 2x 2-layer	**EI 120 C/U**	**3**	**-**	
Non-combustible pipes made of copper, steel, stainless steel or cast iron with non-combustible insulation "lamella mat"					
Pipe outer Ø ≤ 15.0 mm	≥ 250 mm x ≥ 20 mm	**EI 90 / E 120 C/U**	**3**	**-**	
	∞ x ≥ 20 mm	**EI 120 C/U**	**7**	**-**	
Pipe outer Ø ≤ 28.0 mm	≥ 750 mm x ≥ 30 mm + lamella mat ≥ 250 mm x ≥ 30 mm	**EI 90 / E 120 C/U**	**3**	**-**	
	∞ x ≥ 30 mm + lamella mat ≥ 250 mm x ≥ 30 mm	**EI 120 C/U**	**7**	**-**	
Pipe outer Ø ≤ 42.0 mm	≥ 750 mm x ≥ 30 mm + lamella mat ≥ 250 mm x ≥ 30 mm	**EI 90 / E 120 C/U**	**3**	**-**	
	∞ x ≥ 30 mm + lamella mat ≥ 250 mm x ≥ 30 mm	**EI 120 C/U**	**7**	**-**	
Non-combustible pipes made of steel, stainless steel or cast iron with non-combustible insulation "lamella mat"					
Pipe outer Ø ≤ 63.5 mm	≥ 750 mm x ≥ 30 mm + lamella mat ≥ 250 mm x ≥ 30 mm	**EI 60 / E 120 C/U**	**3**	**-**	
	∞ x ≥ 30 mm + lamella mat ≥ 500 mm x ≥ 30 mm	**EI 120 C/U**	**7**	**-**	
Pipe outer Ø ≤ 114.3 mm	≥ 1,000 mm x ≥ 30 mm + lamella mat ≥ 500 mm x ≥ 30 mm	**EI 60 / E 120 C/U**	**3**	**-**	
	∞ x ≥ 30 mm + lamella mat ≥ 500 mm x ≥ 30 mm	**EI 120 C/U**	**7**	**-**	

* 1 → KB 02423.2/15/Z00NZP, 2 → KB 02423.3/15/Z00NZP, 3 → KB 02423.4/15/Z00NZP, 4 → KB 02423.5/15/Z00NZP, 5 → KB 02423.6/15/Z00NZP, 6 → Techn. Opinion No. 02423.7/15/Z00NZP, 7 → Techn. Opinion No. 02423.8/15/Z00NZP, 8 → Techn. Opinion No. 02423.9/15/Z00NZP, 9 → Techn. Opinion No. 01012/19/Z00NZP

PYRO-SAFE® Flammotect OSI

1.8.3 Installation in floors, from below

1.8.3.1 2-layer penetration sealing system

Fire ratings

	Measure	Wall		Floor	
		Fire rating	Source*	Fire rating	Source*
Cables, cable bundles and cable support systems with "PYRO-SAFE® FLAMMOTECT-A" coating					
Cable Ø ≤ 21 mm	≥ 150 mm, TSD ≥ 1 mm	-		EI 120	4
Cable Ø ≤ 50 mm	≥ 150 mm, TSD ≥ 2 mm	-		EI 120	4
Cable Ø ≤ 80 mm	≥ 150 mm, TSD ≥ 2 mm	-		EI 90	4
Cable bundle Ø ≤ 100 mm	≥ 150 mm, TSD ≥ 1 mm	-		EI 120	4
Cables, cable bundles and cable support systems with fire protection wrap "PYRO-SAFE® DG-CR 1.5" – wrapping width 125 mm					
Cable Ø ≤ 21 mm	1x 1-layer, 40-60 mm overlap	-		EI 120	4
Cable bundle Ø ≤ 100 mm	1x 1-layer, 40-60 mm overlap	-		EI 120	4
Electrical conduits with fire protection wrap "PYRO-SAFE® DG-CR 1.5" – wrapping width 125 mm					
Electrical conduit individual Ø ≤ 32 mm	2x 2-layer	-		EI 120 U/U	4
Electrical conduit bundled Ø ≤ 100 mm	2x 2-layer	-		EI 120 U/U	4
"Speed pipes" bundled or individual, with/without glass fibre cable, with fire protection wrap "PYRO-SAFE® DG-CR 1.5" – wrapping width 125 mm					
Max. 24 pcs conduit outside Ø ≤ 7 Max. 7 pcs pipe outer Ø ≤ 10 Max. 5 pcs pipe outer Ø ≤ 12	2x 2-layer	-		EI 120 U/U	4
Special duo coax bundle with "PYRO-SAFE® FLAMMOTECT-A" coating					
Bundle Ø ≤ 90 mm / cable Ø ≤ 14 mm	≥ 150 mm, TSD ≥ 1 mm	-		EI 120 U/U	4
Combustible PVC-U, PVC-C pipes with intumescent "PYRO-SAFE® DG-CR BS" wrap - wrapping width 100 mm					
Pipe outer Ø ≤ 50 mm	1x 1-layer	-		EI 120 U/U	4
Pipe outer Ø ≤ 70 mm	1x 2-layer	-		EI 120 U/U	4
Pipe outer Ø ≤ 110 mm	1x 3-layer	-		EI 120 U/U	4
Pipe outer Ø ≤ 125 mm	1x 4-layer	-		EI 120 U/U	4
Non-combustible pipes made of copper, steel, stainless steel or cast iron with combustible insulation "NH/Armaflex", with fire protection wrap "PYRO-SAFE® DG-CR 1.5" – wrapping width 125 mm					
Pipe outer Ø ≤ 15.0 mm	≥ 400 / 750 mm (bottom/top) x 13 - 24 mm + wrap 2x 1-layer	-		EI 90 / E 120 C/U	4
	≥ 400 / 750 mm (bottom/top) x 25 mm + wrap 2x 1-layer	-		EI 120 C/U	4
Pipe outer Ø ≤ 28.0 mm	≥ 400 / 750 mm (bottom/top) x 19 - 25 mm + wrap 2x 1-layer	-		EI 120 C/U	4
Pipe outer Ø ≤ 42.0 mm	≥ 400 / 750 mm (bottom/top) x 19 - 24 mm + wrap 2x 1-layer	-		EI 90 / E 120 C/U	4
	≥ 400 / 750 mm (bottom/top) x 25 mm + wrap 2x 1-layer	-		EI 120 C/U	4
Multi-layer composite pipes "HENCO pipes" with non-combustible insulation made of mineral fibre "lamella mat"					
Pipe outer Ø ≤ 12.0 mm	≥ 500 mm x ≥ 20 mm	-		EI 120 U/C	4
Pipe outer Ø ≤ 63.0 mm	≥ 500 mm x ≥ 30 mm	-		EI 120 U/C	4
Multi-layer composite pipes "HENCO pipes" with PE foam insulation with intumescent wrap "PYRO-SAFE® DG-CR BS" – wrapping width 100 mm					
Pipe outer Ø ≤ 32.0 mm	2x 1-layer + lamella mat ≥ 500 mm x ≥ 20 mm	-		EI 120 U/C	4

PYRO-SAFE® Flammotect OSI

Fire ratings					
	Measure	Wall		Floor	
		Fire rating	Source*	Fire rating	Source*
Non-combustible pipes made of copper, steel, stainless steel or cast iron with non-combustible insulation "lamella mat"					
Pipe outer Ø ≤ 28.0 mm	≥ 500 / 500 mm (top/bottom) x ≥ 30 mm	-		EI 120 C/U	4
Pipe outer Ø ≤ 42.0 mm	≥ 500 / 500 mm (top/bottom) x ≥ 40 mm	-		EI 120 C/U	4
Pipe outer Ø ≤ 54.0 mm	∞ / ≥ 950 mm (top/bottom) x ≥ 40 mm	-		EI 120 C/U	6
	≥ 500 / 1,000 mm (top/bottom) x ≥ 30 mm + lamella mat ≥ 950 mm x ≥ 30 mm + lamella mat ≥ 500 mm x ≥ 30 mm	-		EI 120 C/U	4
Pipe outer Ø ≤ 88.9 mm	∞ / ≥ 950 mm (top/bottom) x ≥ 40 mm	-		EI 120 C/U	6
	≥ 500 / 1,000 mm (top/bottom) x ≥ 40 mm + lamella mat ≥ 950 mm x ≥ 30 mm	-		EI 120 C/U	4
Non-combustible pipes made of steel, stainless steel or cast iron with non-combustible insulation "lamella mat"					
Pipe outer Ø ≤ 63.5 mm	∞ / ≥ 950 mm (top/bottom) x ≥ 30 mm	-		EI 120 C/U	6
	≥ 500 / 1,000 mm (top/bottom) x ≥ 30 mm + lamella mat ≥ 500 mm x ≥ 30 mm	-		EI 120 C/U	4
Pipe outer Ø ≤ 114.3 mm	∞ / ≥ 950 mm (top/bottom) x ≥ 50 mm	-		EI 120 C/U	6
	≥ 500 / 1,000 mm (top/bottom) x ≥ 50 mm + lamella mat ≥ 950 mm x ≥ 30 mm	-		EI 120 C/U	4

* 1 → KB 02423.2/15/Z00NZP, 2 → KB 02423.3/15/Z00NZP, 3 → KB 02423.4/15/Z00NZP, 4 → KB 02423.5/15/Z00NZP, 5 → KB 02423.6/15/Z00NZP,
6 → Techn. Opinion No. 02423.7/15/Z00NZP, 7 → Techn. Opinion No. 02423.8/15/Z00NZP, 8 → Techn. Opinion No. 02423.9/15/Z00NZP, 9 → Techn. Opinion No. 01012/19/Z00NZP

1.8.3.2 3-layer penetration sealing system

Fire ratings					
	Measure	Wall		Floor	
		Fire rating	Source*	Fire rating	Source*
Cables, cable bundles and cable support systems with "PYRO-SAFE® FLAMMOTECT-A" coating					
Cable Ø ≤ 21 mm	≥ 150 mm, TSD ≥ 1 mm	-		EI 120	5
Cable Ø ≤ 50 mm	≥ 150 mm, TSD ≥ 1 mm	-		EI 90	5
Cable Ø ≤ 80 mm	≥ 150 mm, TSD ≥ 1 mm	-		EI 90	5
Cable bundle Ø ≤ 100 mm	≥ 150 mm, TSD ≥ 1 mm	-		EI 120	5
Cables, cable bundles and cable support systems with fire protection wrap "PYRO-SAFE® DG-CR 1.5" – wrapping width 125 mm					
Cable Ø ≤ 21 mm	1x 1-layer, 40-60 mm overlap	-		EI 120	5
Cable Ø ≤ 50 mm	1x 1-layer, 40-60 mm overlap	-		EI 90	5
Cable Ø ≤ 80 mm	1x 1-layer, 40-60 mm overlap	-		EI 90	5
Cable bundle Ø ≤ 100 mm	1x 1-layer, 40-60 mm overlap	-		EI 120	5
Multi-layer composite pipes "HENCO pipes" with combustible insulation "Armaflex Protect"					
Pipe outer Ø ≤ 12.0 mm	≥ 480 mm x 19 mm	-		EI 120 U/C	5
Pipe outer Ø ≤ 63.0 mm	≥ 480 mm x 25 mm	-		EI 120 U/C	5
HVAC split line combinations with fire protection wrap "PYRO-SAFE® DG-CR 1.5" – wrapping width 125 mm					
Double (6-22/8-22 mm) or single copper pipe (6-22 mm) with PEF-Iso 9 mm + PE-HD pipe ≤ 25 mm + max. 4 sheathed cables ≤ 21 mm	2x 1-layer + lamella mat ≥ 250/500 mm (top/bottom) x ≥ 30 mm	-		EI 120 U/U	5

* 1 → KB 02423.2/15/Z00NZP, 2 → KB 02423.3/15/Z00NZP, 3 → KB 02423.4/15/Z00NZP, 4 → KB 02423.5/15/Z00NZP, 5 → KB 02423.6/15/Z00NZP,
6 → Techn. Opinion No. 02423.7/15/Z00NZP, 7 → Techn. Opinion No. 02423.8/15/Z00NZP, 8 → Techn. Opinion No. 02423.9/15/Z00NZP, 9 → Techn. Opinion No. 01012/19/Z00NZP

PYRO-SAFE® Flammotect OSI

2. Design in shaft walls

PYRO-SAFE® Flammotect OSI

2.1 Permissible configuration

2.1.1 Cables / cable bundles / cable support structures / electrical conduits / PE pipes

Electrical cables and lines of all types (including fibre optic cables)

Maximum size of the overall cross-section of the individual cables Ø ≤ 80 mm.

Cable bundles

Up to Ø ≤ 100 mm with cables Ø ≤ 21 mm.

No gusset filling necessary for tightly packed, tied cable bundles.

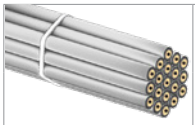

Special duo coax bundle (for TV upgrade)

Up to Ø ≤ 90 mm with cables Ø ≤ 14 mm.

acc. to DIN EN 50117-1 "TELASS CDF 101 (A+) with PE pipes Ø 3.5/5.0 FRNC" from Bedea Berkenhoff & Drebas GmbH or "oren Hydra-DD 113 (1.1/4.8) FRNC (A+) with PE pipes Ø 3.5/5.0" from Oren Kable.

+ A1-PVC cable (NYM-J 5x 1.5 mm², Ø 14 mm)

+ PVC cable (NYM-J 3x 1.5 mm², Ø 8 mm)

+ Earth cable (H07V-U, 1x 4 mm², Ø 4 mm)

No gusset filling necessary for tightly packed, tied cable bundles.

Cable support structures

Cable trays and cable ladders made of steel poss. with organic coatings if the overall reaction to fire corresponds to at least A2, acc. to EN 13501-1.

Electrical conduits, single made of plastic.

Outer Ø ≤ 32 mm, with/without cable configuration Ø ≤ 21 mm.

Electrical conduit bundle made of plastic.

Outer Ø ≤ 100 mm with individual pipes
Outer Ø ≤ 32 mm, with/without cable configuration, individual cable Ø ≤ 21 mm.

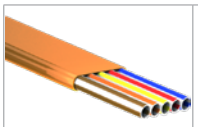

PE pipes "speed pipes" (for glass fibre cables and micro cables)

From Gabocom Systemtechnik GmbH, bundled or individual, with/without glass fibre cable.

Pipe outer Ø [mm]	Max. number [pcs.]	Pipe wall thickness [mm]
≤ 7	24	≤ 1.5
≤ 10	7	≤ 2.0
≤ 12	5	≤ 2.0

PYRO-SAFE® Flammotect OSI

2.2 Distances

Distances – shaft wall, 2-layer penetration seal design

		Individual cables	Cable bundles	Cable support systems	Special duo coax bundle	Electrical conduits, individual or bundled	PE pipes "speed pipes"	Component reveal		
								Top	Bottom	Side
	Individual cables	≥ 0	≥ 0	≥ 0	≥ 0	≥ 25	≥ 10	≥ 0		
	Cable bundles	≥ 0	≥ 0	≥ 0	≥ 0	≥ 25	≥ 10			
	Cable support systems	≥ 0	≥ 0	≥ 0(≥ 40 on top of each other)	≥ 0	≥ 25	≥ 10			
	Special duo coax bundles	≥ 0	≥ 0	≥ 0	≥ 0	≥ 100	≥ 100	≥ 0		
	Electrical conduits individual or bundled	≥ 25	≥ 25	≥ 25	≥ 100	≥ 0	≥ 100	≥ 10		
	PE pipes "speed pipes"	≥ 10	≥ 10	≥ 10	≥ 100	≥ 100	≥ 0	≥ 0		

Distances – shaft wall, 3-layer penetration seal design

		Individual cables	Cable bundles	Cable support systems	Component reveal		
					Top	Bottom	Side
	Individual cables	≥ 0	≥ 0	≥ 0	≥ 0		
	Cable bundles	≥ 0	≥ 0	≥ 0			
	Cable support systems	≥ 0	≥ 0	≥ 0 (≥ 50 on top of each other)			

PYRO-SAFE® Flammotect OSI

2.3 Design specifications and variants / initial brackets (supports)

- The combined penetration sealing system may be used to close openings without installations (so-called reserve penetration sealing system).
- The penetration seal surface made of mineral fibre boards and their edges must be coated with PYRO-SAFE® FLAMMOTECT-A, dry layer thickness ≥ 0.75 mm.
- The first layer of boards is carefully glued into the component with PYRO-SAFE® FLAMMOTECT-A, the other layers are then positioned on all sides of the component opening with a protrusion of 50 mm and fastened to the each of the preceding boards with coarse thread screws, see screw pattern below.
- In order to facilitate assembly, the mineral fibre boards can be glued using PYRO-SAFE® FLAMMOTECT-A to the component and/or to each other.
- The fire protection measures described on the following pages also apply to retrofitting.

Design variants in shaft walls

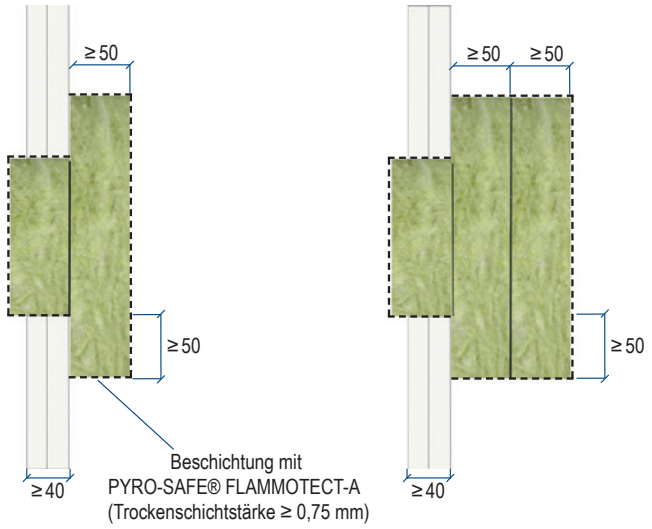

Dimensions in mm

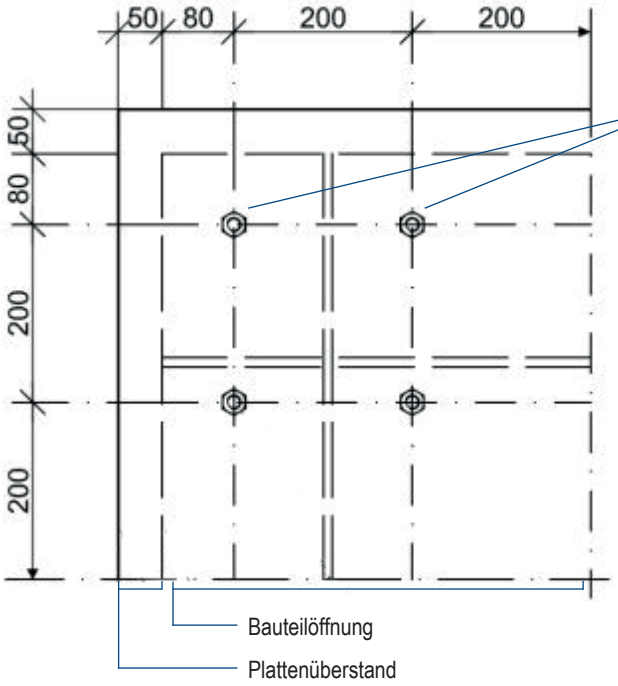

Verschraubung mit Grobgewinde-Trockenbauschrauben

Schrauben-Ø:	8,0 mm
Schraubenlänge:	100 mm
Gewindelänge:	≥ 60 mm

PYRO-SAFE® Flammotect OSI

Essential parts of the brackets/supports for the installations in front of the wall penetration sealing system must be non-combustible (construction material class DIN 4102-A) and must be configured with a spacing as per the overview on both sides.

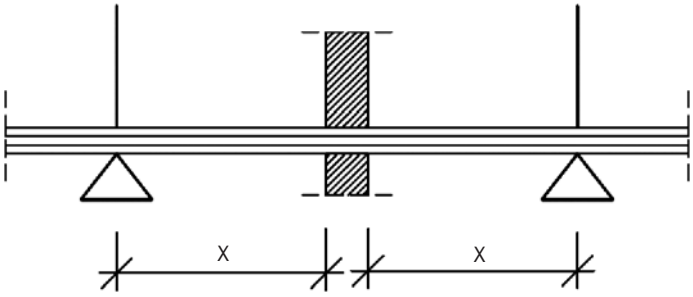

Initial bracket (support) of the installations in front of the wall penetration sealing system made of steel or equivalent.

Initial brackets	
Cables, cable bundles, cable support structures,	≤ 300 mm
Special duo coax bundles	≤ 350 mm
Electrical conduits	≤ 300 mm
PE pipes "speed pipes" for glass fibre cables and micro cables	according to manufacturer's specifications

PYRO-SAFE® Flammotect OSI

2.3.1 Cable / cable bundle / cable support structures

- The passage of cables or cable bundles is permitted without and with cable trays.
- Cable bundles may be routed unopened through the penetration seal and do not have to be filled internally (gusset) with construction materials if they consist of tightly packed cables which are tightly tied, sewn or welded together and run in parallel.
- The support structures of the cable trays must be designed in such a way that in the event of fire no additional mechanical stress can occur on the penetration sealing system.
- As an alternative to the coating, the passages can be wrapped with fire protection wrap PYRO-SAFE® DG-CR 1.5.
- Fire protection wrap PYRO-SAFE® DG-CR 1.5 is coated on one side and equipped with a protective film. This must be removed before the wrap is fixed in position with the coated side pointing inwards and with steel wires.

2-layer or 3-layer design in shaft walls

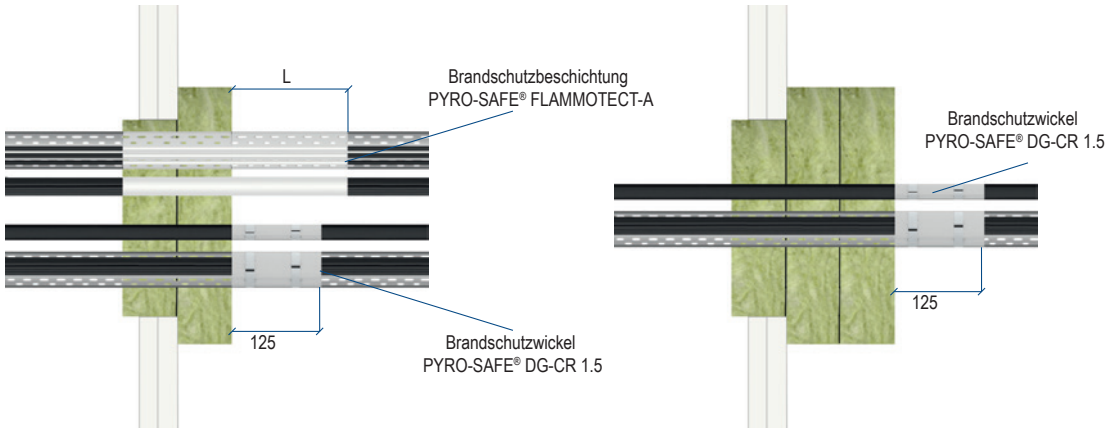

Component, penetration seal thicknesses and design variants page 7 and page 17

Dimensions in mm

2-layer penetration seal design

	Dimensions [mm]	Fire protection coating PYRO-SAFE® FLAMMOTECT-A			Fire rating	
		Dry layer thickness [mm]	In the penetration sealing system [mm]	In front of the penetration sealing system L [mm]	Wall	Floor
Cables	Ø ≤ 21	≥ 1.0	100	≥ 150	EI 90 / E 120	-
Cable bundles	Ø ≤ 100	≥ 1.0		≥ 150	EI 120	-

	Dimensions [mm]	Fire protection wrap PYRO-SAFE® DG-CR 1.5						Fire rating	
		Wrapping width [mm]	No. of wraps [n]	No. of layers [n]	Overlap [mm]	In the penetration sealing system [mm]	In front of the penetration sealing system [mm]	Wall	Floor
Cables	Ø ≤ 21	125	1	1	≥ 45	0	125	EI 120	-
Cable bundles	Ø ≤ 100							EI 90 / E 120	-

3-layer penetration seal design

	Dimensions [mm]	Fire protection wrap PYRO-SAFE® DG-CR 1.5						Fire rating	
		Wrapping width [mm]	No. of wraps [n]	No. of layers [n]	Overlap [mm]	In the penetration sealing system [mm]	In front of the penetration sealing system [mm]	Wall	Floor
Cables	Ø ≤ 21	125	1	1	≥ 45	0	125	EI 120	-
	Ø ≤ 50							EI 90 / E 120	-
	Ø ≤ 80							EI 90 / E 120	-
Cable bundles	Ø ≤ 100							EI 120	-

PYRO-SAFE® Flammotect OSI

2.3.2 Special duo coax bundles

- Special duo coax bundles may be routed unopened through the penetration seal and do not have to be filled internally (gusset) with construction materials if they consist of tightly packed cables which are tightly tied, sewn or welded together and run in parallel.
- The special duo coax bundles must be coated with PYRO-SAFE® FLAMMOTECT-A over a length of ≥ 150 mm on the installation side (dry layer thickness ≥ 1.0 mm).

2-layer design in shaft walls

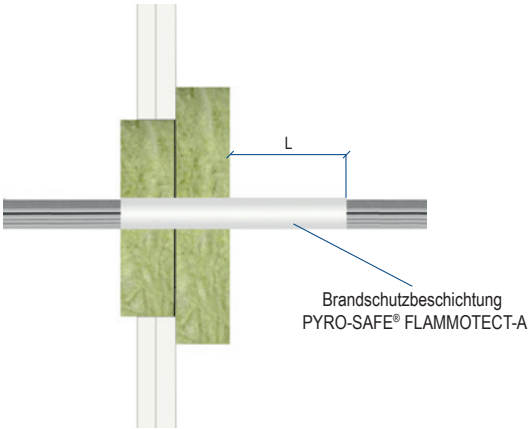

Component, penetration seal thicknesses and design variants page 7 and page 17

Dimensions in mm

	Dimensions [mm]	Fire protection coating PYRO-SAFE® FLAMMOTECT-A			Fire rating	
		Dry layer thickness [mm]	In the penetration sealing system [mm]	In front of the penetration sealing system L [mm]	Wall	Floor
Bundle / cable	Ø ≤ 90 / Ø ≤ 14	≥ 1.0	100	≥ 150	EI 120 U/U	-

PYRO-SAFE® Flammotect OSI

2.3.3 Electrical conduits, individual or bundled

- Electrical conduits can be passed through both individually and in bundled form with/without cable configuration.
- Both ends of the electrical conduits must be wrapped with fire protection wrap PYRO-SAFE® DG-CR 1.5.
- Fire protection wrap PYRO-SAFE® DG-CR 1.5 is coated on one side and equipped with a protective film. This must be removed before the wrap is fixed in position with the coated side pointing inwards and with steel wires.

2-layer design in shaft walls

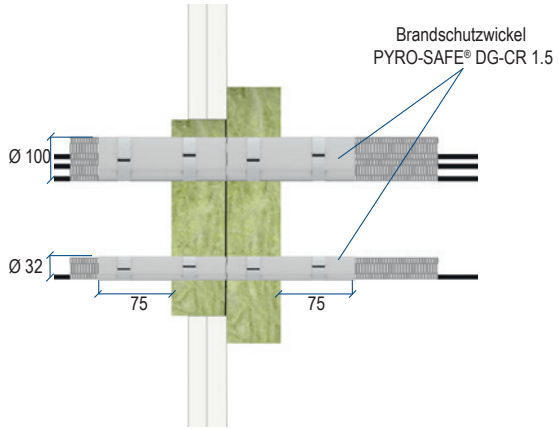

Component, penetration seal thicknesses and design variants page 7 and page 17

Dimensions in mm

Design variant	Dimensions [mm]	Fire protection wrap PYRO-SAFE® DG-CR 1.5						Fire rating	
		Wrapping width [mm]	No. of wraps [n]	No. of layers [n]	Overlap [mm]	In the penetration sealing system [mm]	In front of the penetration sealing system [mm]	Wall	Floor
Electrical conduit made of plastic, single	Ø ≤ 32 (with/without cable Ø ≤ 21)	125	2	2	0	50	75	EI 120 U/U	-
Electrical conduit made of plastic, bundled	Ø ≤ 100 (single conduits up to Ø ≤ 32, with/without cable Ø ≤ 21)	125	2	2	0	50	75	EI 120 U/U	-

PYRO-SAFE® Flammotect OSI

2.3.4 PE pipes "speed pipes"

- The PE pipes "speed pipes" must be wrapped at both ends with fire protection wrap PYRO-SAFE® DG-CR 1.5.
- Fire protection wrap PYRO-SAFE® DG-CR 1.5 is coated on one side and equipped with a protective film. This must be removed before the wrap is fixed in position with the coated side pointing inwards and with steel wires.

2-layer design in shaft walls

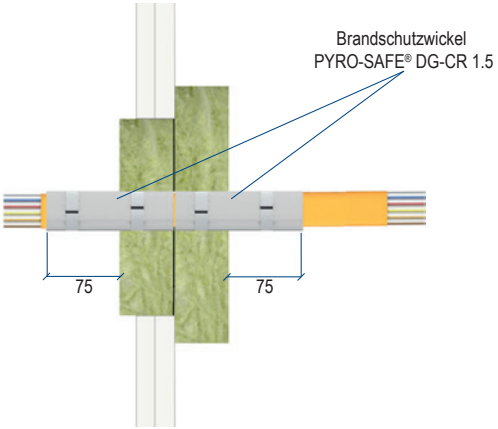

Component, penetration seal thicknesses and design variants page 7 and page 17

Dimensions in mm

Configuration of speed pipes	Wall thickness [mm]	Fire protection wrap PYRO-SAFE® DG-CR 1.5						Fire rating	
		Wrapping width [mm]	No. of wraps [n]	Layers [n]	Overlap [mm]	In the penetration sealing system [mm]	In front of the penetrati-on sealing system [mm]	Wall	Floor
Ø 7.0 mm x 24 pieces	≥ 1.5	125	2	2	0	50	75	EI 120 U/U	-
Ø 10.0 mm x 7 pieces	≥ 2.0								
Ø 12.00 mm x 5 pieces	≥ 2.0								

PYRO-SAFE® Flammotect OSI

3. Design in plasterboard walls and solid walls

PYRO-SAFE® Flammotect OSI

3.1 Permissible configuration

3.1.1 Cables / cable bundles / cable support structures / electrical conduits / PE pipes

Electrical cables and lines of all types (including fibre optic cables)

Maximum size of the overall cross-section of the individual cables Ø ≤ 80 mm.

Cable bundles

Up to Ø ≤ 100 mm with cables Ø ≤ 21 mm.

No gusset filling necessary for tightly packed, tied cable bundles.

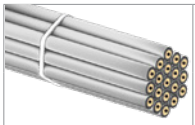

Special duo coax bundle (for TV upgrade)

Up to Ø ≤ 90 mm with cables Ø ≤ 14 mm.

acc. to DIN EN 50117-1 "TELASS CDF 101 (A+) with PE pipes Ø 3.5/5.0 FRNC" from Bedea Berkenhoff & Drebas GmbH or "oren Hydra-DD 113 (1.1/4.8) FRNC (A+) with PE pipes Ø 3.5/5.0" from Oren Kable.

+ A1-PVC cable (NYM-J 5x 1.5 mm², Ø 14 mm)

+ PVC cable (NYM-J 3x 1.5 mm², Ø 8 mm)

+ Earth cable (H07V-U, 1x 4 mm², Ø 4 mm)

No gusset filling necessary for tightly packed, tied cable bundles.

Cable support structures

Cable trays and cable ladders made of steel poss. with organic coatings if the overall reaction to fire corresponds to at least A2, acc. to EN 13501-1.

Electrical conduit, single made of plastic.

Outer Ø ≤ 32 mm, with/without cable configuration Ø ≤ 21 mm.

Electrical conduit bundle made of plastic.

Outer Ø ≤ 100 mm with individual pipes
Outer Ø ≤ 32 mm, with/without cable configuration, individual cable Ø ≤ 21 mm.

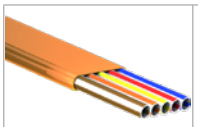

PE pipes "speed pipes" (for glass fibre cables and micro cables)

From Gabocom Systemtechnik GmbH, bundled or individual, with/without glass fibre cable.

Pipe outer Ø [mm]	Max. number [pcs.]	Pipe wall thickness [mm]
≤ 7	24	≤ 1.5
≤ 10	7	≤ 2.0
≤ 12	5	≤ 2.0

PYRO-SAFE® Flammotect OSI

3.1.2 Combustible pipes

Combustible pipes

Design with fire protection wrap PYRO-SAFE® DG-CR BS up to an outer Ø of ≤ 125 mm for ventilated waste water pipes and closed pipe systems. Non-combustible fluids or non-combustible gases (with the exception of ventilation pipes) may be carried in the pipes.

PVC-U, PVC-C

Standards:

EN 1329-1, EN 1453-1, EN 1542-1, EN 15493, DIN 8061/8062, EN 1566-1

Pipe outer Ø [mm]	Pipe wall thickness [mm]
≤ 50	1.8 - 3.7
≤ 70	1.9 - 6.0
≤ 80	2.0 - 6.0
≤ 100	2.1 - 8.2
≤ 110	2.2 - 8.2

3.1.3 Non-combustible pipes

Non-combustible pipes

Pipes made of copper, steel, stainless steel or cast steel

Pipe materials / insulation	Outer Ø [mm]	Pipe wall thickness [mm]
Copper with non-combustible mineral fibre pipe insulation, e.g. "Klimarock"	≤ 15.0	≥ 0.8
	≤ 28.0	≥ 1.0
	≤ 42.0	≥ 1.2
Steel, stainless steel, cast material with non-combustible mineral fibre pipe insulation, e.g. "Klimarock"	≤ 63.5	≥ 2.3
	≤ 114.3	≥ 2.9
Copper with combustible insulation "NH/Armaflex"	≤ 15.0	≥ 0.8
	≤ 28.0	≥ 0.9
	≤ 42.0	≥ 1.1

• Pipes made of other metals whose heat transfer is lower than steel or copper with a melting point of ≥ 1,049°C may also be sealed.

PYRO-SAFE® Flammotect OSI

3.2 Distances

Distances

		Individual cables	Cable bundles	Cable support systems	Special duo coax bundles	Electrical conduits, individual or bundled	Combustible pipes	Non-combustible pipes, "lamella mat" insulation	Non-combustible pipes, insulation made of FEF "NH/Armaflex"	PE pipes "speed pipes"	Component reveal		
											Top	Bottom	Side
	Individual cables	≥ 0	≥ 0	≥ 0	≥ 0	≥ 25	≥ 50	≥ 20	≥ 25	≥ 10	≥ 0		
	Cable bundles	≥ 0	≥ 0	≥ 0	≥ 0	≥ 25	≥ 50	≥ 20	≥ 25	≥ 10			
	Cable support systems	≥ 0	≥ 0	≥ 0 (≥ 40 on top of each other)	≥ 0	≥ 25	≥ 50	≥ 20	≥ 25	≥ 10			
	Special duo coax bundles	≥ 0	≥ 0	≥ 0	≥ 0	≥ 100	≥ 100	≥ 100	≥ 100	≥100	≥ 0		
	Electrical conduits individual or bundled	≥ 25	≥ 25	≥ 25	≥ 100	≥ 0	≥ 100	≥ 100	≥ 100	≥ 100	≥ 10		
	Combustible pipes	≥ 50	≥ 50	≥ 50	≥ 100	≥ 100	≥ 100	≥ 0	≥ 0	≥ 100	≥ 0		
	Non-combustible pipes; Insulation made of lamella mat	≥ 20	≥ 20	≥ 20	≥ 100	≥ 100	≥ 0	≥ 0	≥ 0	≥ 100	≥ 0		
	Non-combustible pipes; insulation made of FEF „NH/Armaflex“	≥ 25	≥ 25	≥ 25	≥ 100	≥ 100	≥ 0	≥ 0	≥ 0	≥ 100	≥ 0		
	PE pipes "speed pipes"	≥ 10	≥ 10	≥ 10	≥ 100	≥ 100	≥ 100	≥ 100	≥ 100	≥ 0	≥ 0		

PYRO-SAFE® Flammotect OSI

3.3 Design specifications and variants / initial brackets (supports)

- The combined penetration sealing system may be used to close openings without installations (so-called reserve penetration sealing system).
- Depending on the media used, a 2-layer or 3-layer penetration sealing system is required. Media which require a 2-layer penetration seal structure may also be sealed off in 3 layers.
- For installation in plasterboard walls, a circumferential reveal lining is required.
- The penetration seal surface made of mineral fibre boards and their edges must be coated with PYRO-SAFE® FLAMMOTECT-A, dry layer thickness ≥ 0.75 mm.
- The first layer of boards is carefully glued into the component with PYRO-SAFE® FLAMMOTECT-A, the other layers are then positioned on all sides of the component opening with a protrusion of 50 mm and fastened to the each of the preceding boards with coarse thread screws, see screw pattern below.
- In order to facilitate assembly, the mineral fibre boards can be glued using PYRO-SAFE® FLAMMOTECT-A to the component and/or to each other.
- The fire protection measures described on the following pages also apply to retrofitting.

Design variants in plasterboard walls or solid walls

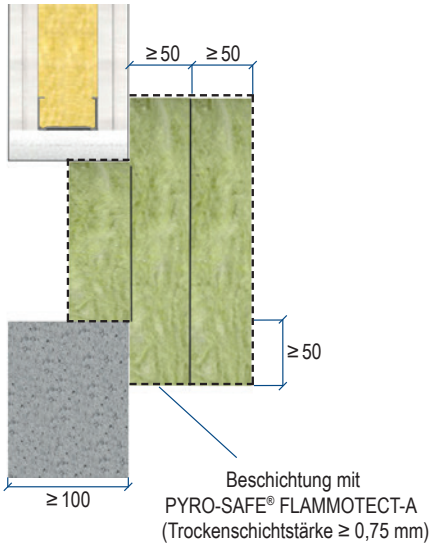

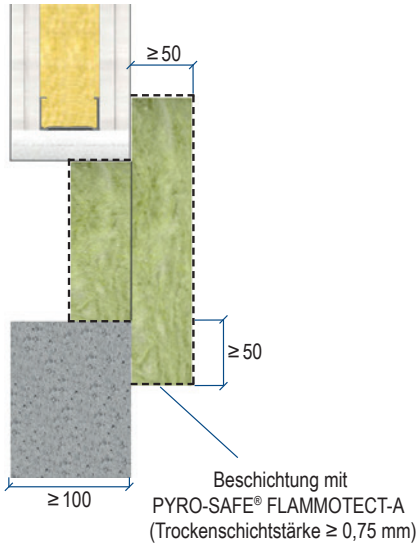

Dimensions in mm

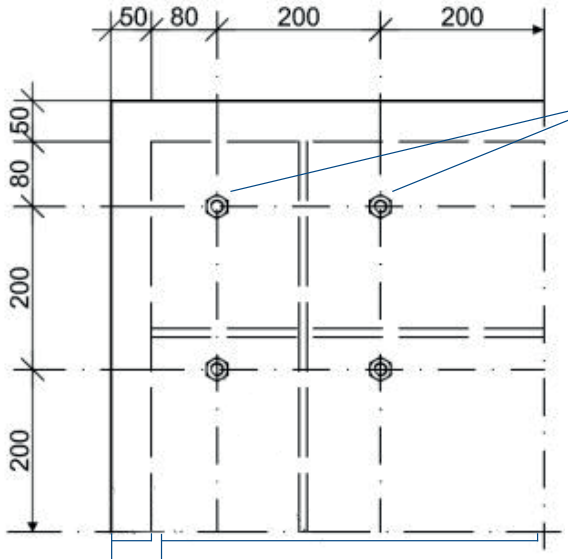

Verschraubung mit Grobgewinde-Trockenbauschrauben

Schrauben-Ø:	8,0 mm
Schraubenlänge:	100 mm
Gewindelänge:	≥ 60 mm

PYRO-SAFE® Flammotect OSI

Essential parts of the brackets/supports for the installations in front of the wall penetration sealing system must be non-combustible (construction material class DIN 4102-A) and must be configured with a spacing as per the overview on both sides.

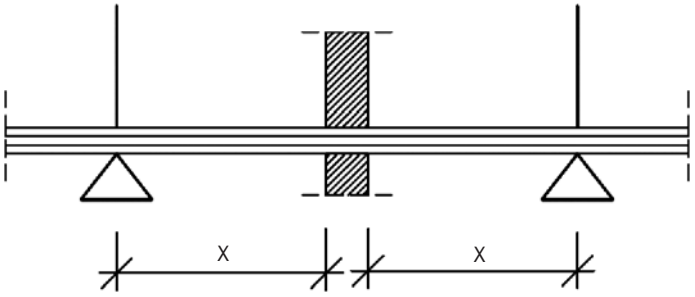

Initial bracket (support) of the installations in front of the wall penetration sealing system made of steel or equivalent.

Initial brackets	
Cables, cable bundles, cable support structures,	≤ 300 mm
Special duo coax bundles	≤ 350 mm
Electrical conduits	≤ 300 mm
Combustible pipes	≤ 500 mm
Non-combustible pipes – section insulation made of mineral fibre	≤ 600 mm
Non-combustible pipes – section installation made of FEF	≤ 600 mm
PE pipes "speed pipes" for glass fibre cables and micro cables	according to manufacturer's specifications

PYRO-SAFE® Flammotect OSI

3.4 Fire protection measures

3.4.1 Cable / cable bundle / cable support structures

3.4.1.1 2-layer design

- The passage of cables or cable bundles is permitted without and with cable trays.
- Cable bundles may be routed unopened through the penetration seal and do not have to be filled internally (gusset) with construction materials if they consist of tightly packed cables which are tightly tied, sewn or welded together and run in parallel.
- The support structures of the cable trays must be designed in such a way that in the event of fire no additional mechanical stress can occur on the penetration sealing system.
- As an alternative to the coating, the passages can be wrapped with fire protection wrap PYRO-SAFE® DG-CR 1.5.
- Fire protection wrap PYRO-SAFE® DG-CR 1.5 is coated on one side and equipped with a protective film. This must be removed before the wrap is fixed in position with the coated side pointing inwards and with steel wires.

2-layer design in plasterboard walls or solid walls

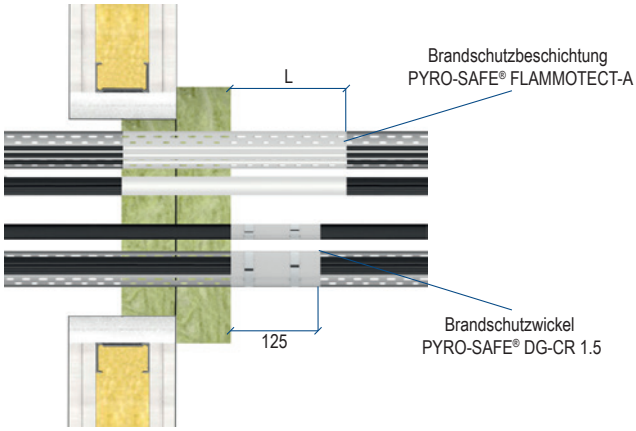

Component, penetration seal thicknesses and design variants page 7 and page 27

Dimensions in mm

	Dimensions [mm]	Fire protection coating PYRO-SAFE® FLAMMOTECT-A			Fire rating	
		Dry layer thickness [mm]	In the penetration sealing system [mm]	In front of the penetration sealing system L [mm]	Wall	Floor
Cables	Ø ≤ 21	≥ 1.0	100	≥ 150	EI 90 / E 120	-
Cable bundles	Ø ≤ 100	≥ 1.0		≥ 150	EI 120	-

	Dimensions [mm]	Fire protection wrap PYRO-SAFE® DG-CR 1.5						Fire rating	
		Wrapping width [mm]	No. of wraps [n]	No. of layers [n]	Overlap [mm]	In the penetration sealing system [mm]	In front of the penetration sealing system [mm]	Wall	Floor
Cables	Ø ≤ 21	125	1	1	≥ 45	0	125	EI 120	-
Cable bundles	Ø ≤ 100							EI 90 / E 120	-

PYRO-SAFE® Flammotect OSI

3.4.1.2 3-layer design

- The passage of cables or cable bundles is permitted without and with cable trays.
- Cable bundles may be routed unopened through the penetration seal and do not have to be filled internally (gusset) with construction materials if they consist of tightly packed cables which are tightly tied, sewn or welded together and run in parallel.
- The support structures of the cable trays must be designed in such a way that in the event of fire no additional mechanical stress can occur on the penetration sealing system.
- As an alternative to the coating, the passages can be wrapped with fire protection wrap PYRO-SAFE® DG-CR 1.5.
- Fire protection wrap PYRO-SAFE® DG-CR 1.5 is coated on one side and equipped with a protective film. This must be removed before the wrap is fixed in position with the coated side pointing inwards and with steel wires.

3-layer design in plasterboard walls or solid walls

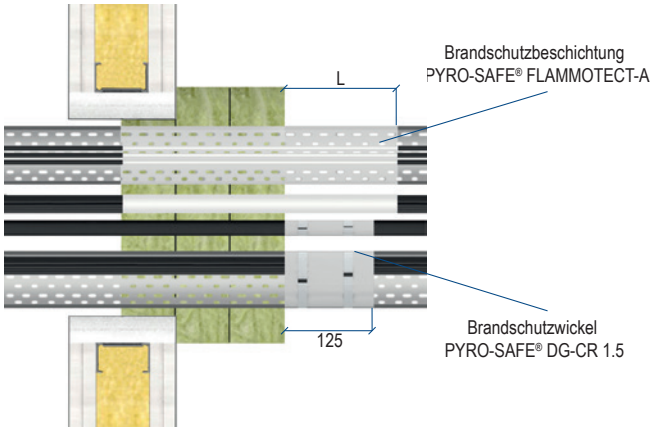

Component, penetration seal thicknesses and design variants page 7 and page 27

Dimensions in mm

	Dimensions [mm]	Fire protection coating PYRO-SAFE® FLAMMOTECT-A			Fire rating	
		Dry layer thickness [mm]	In the penetration sealing system [mm]	In front of the penetration sealing system L [mm]	Wall	Floor
Cables	Ø ≤ 21	≥ 1.0	150	≥ 150	EI 120	-
	Ø ≤ 50	≥ 1.0		≥ 150	EI 90 / E 120	-
	Ø ≤ 80	≥ 1.0		≥ 150	EI 90 / E 120	-
Cable bundles	Ø ≤ 100	≥ 1.0		≥ 150	EI 120	-

	Dimensions [mm]	Fire protection wrap PYRO-SAFE® DG-CR 1.5						Fire rating	
		Wrapping width [mm]	No. of wraps [n]	No. of layers [n]	Overlap [mm]	In the penetration sealing system [mm]	In front of the penetration sealing system [mm]	Wall	Floor
Cables	Ø ≤ 21	125	1	1	≥ 45	0	125	EI 120	-
	Ø ≤ 50							EI 90 / E 120	-
	Ø ≤ 80							EI 90 / E 120	-
Cable bundles	Ø ≤ 100							EI 120	-

PYRO-SAFE® Flammotect OSI

3.4.2 Special duo coax bundles

- Special duo coax bundles may be routed unopened through the penetration seal and do not have to be filled internally (gusset) with construction materials if they consist of tightly packed cables which are tightly tied, sewn or welded together and run in parallel.
- The special duo coax bundles must be coated using PYRO-SAFE® FLAMMOTECT-A over a length of ≥ 150 mm on the installation side (dry layer thickness ≥ 1.0 mm).

2-layer design in plasterboard walls or solid walls

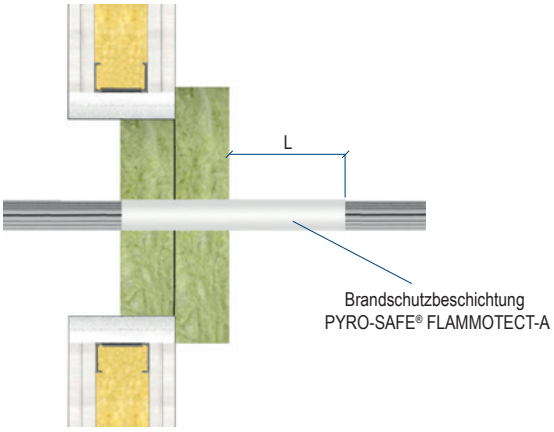

Component, penetration seal thicknesses and design variants page 7 and page 27

Dimensions in mm

	Dimensions [mm]	Fire protection coating PYRO-SAFE® FLAMMOTECT-A			Fire rating	
		Dry layer thickness [mm]	In the penetration sealing system [mm]	In front of the penetration sealing system L [mm]	Wall	Floor
Bundle / cable	Ø ≤ 90 / Ø ≤ 14	≥ 1.0	100 / 150	≥ 150	EI 120	-

PYRO-SAFE® Flammotect OSI

3.4.3 Electrical conduits, individual or bundled

- Electrical conduits can be passed through both individually (up to Ø ≤ 32 mm) and in bundled form (up to Ø ≤ 100 mm with individual pipes up to Ø ≤ 32 mm) with/without cable configuration up to Ø ≤ 21 mm.
- Both ends of the electrical conduits must be wrapped with fire protection wrap PYRO-SAFE® DG-CR 1.5.
- Fire protection wrap PYRO-SAFE® DG-CR 1.5 is coated on one side and equipped with a protective film. This must be removed before the wrap is fixed in position with the coated side pointing inwards and with steel wires.

2-layer design in plasterboard walls or solid walls

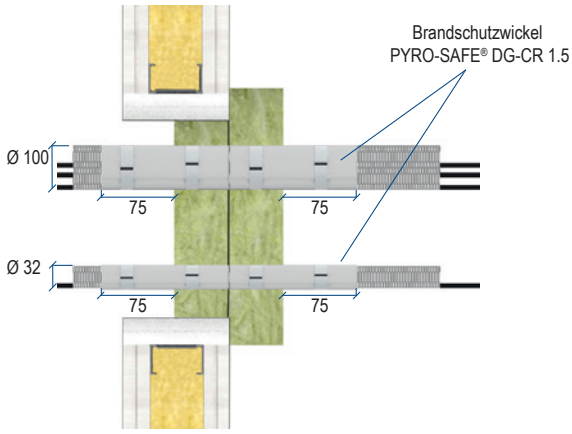

Component, penetration seal thicknesses and design variants page 7 and page 27

Dimensions in mm

Design variant	Dimensions [mm]	Fire protection wrap PYRO-SAFE® DG-CR 1.5						Fire rating	
		Wrapping width [mm]	No. of wraps [n]	No. of layers [n]	Overlap [mm]	In the penetration sealing system [mm]	In front of the penetration sealing system [mm]	Wall	Floor
Electrical conduit made of plastic, single	Ø ≤ 32 (With/without cable Ø ≤ 21)	125	2	2	0	50	75	EI 120 U/U	-
Electrical conduit made of plastic, bundled	Ø ≤ 100 (Single conduits Ø ≤ 32 with/without cable Ø ≤ 21)	125	2	2	0	50	75	EI 120 U/U	-

PYRO-SAFE® Flammotect OSI

3.4.4 PE pipes "speed pipes"

- The PE pipes "speed pipes" must be wrapped at both ends with fire protection wrap PYRO-SAFE® DG-CR 1.5.
- Fire protection wrap PYRO-SAFE® DG-CR 1.5 is coated on one side and equipped with a protective film. This must be removed before the wrap is fixed in position with the coated side pointing inwards and with steel wires.

2-layer design in plasterboard walls or solid walls

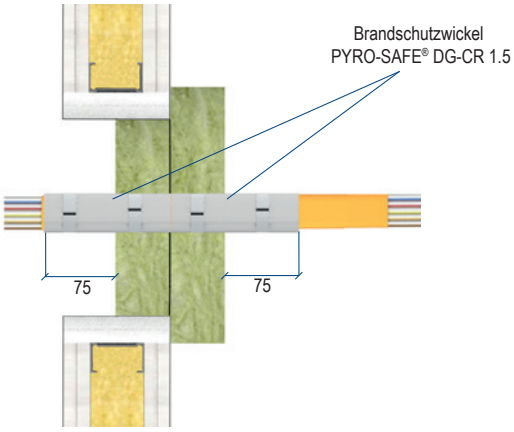

Component, penetration seal thicknesses and design variants page 7 and page 27

Dimensions in mm

Configuration of speed pipes	Wall thickness [mm]	Fire protection wrap PYRO-SAFE® DG-CR 1.5						Fire rating	
		Wrapping width [mm]	No. of wraps [n]	Layers [n]	Overlap [mm]	In the penetration sealing system [mm]	In front of the penetrati-on sealing system [mm]	Wall	Floor
Ø 7.0 mm x 24 pieces	≥ 1.5	125	2	2	0	50	75	EI 120 U/U	-
Ø 10.0 mm x 7 pieces	≥ 2.0								
Ø 12.0 mm x 5 pieces	≥ 2.0								

PYRO-SAFE® Flammotect OSI

3.4.5 Combustible pipes

- The penetration sealing system must only be used on pneumatic conveyor systems, compressed air lines, etc. if the pipe system is shut off in the event of a fire.
- Fire protection wrap PYRO-SAFE® DG-CR BS is coated on both sides and coated with a protective film. This must be removed before the wrap is positioned and fixed with steel wires.

3-layer design in plasterboard walls or solid walls

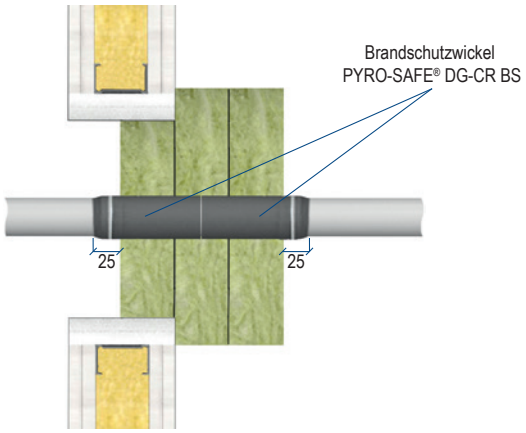

Component, penetration seal thicknesses and design variants page 7 and page 27

Dimensions in mm

Combustible pipes made of PVC-U, PVC-C								
Dimensions [mm]	Intumescent wrap PYRO-SAFE® DG-CR BS						Fire rating	
	Wrapping width [mm]	No. of wraps [n]	No. of layers [n]	Overlap [mm]	In the penetration sealing system [mm]	In front of the penetrati-on sealing system [mm]	Wall	Floor
Ø ≤ 50	100	2	1	0	75	25	EI 120 U/U	-
Ø ≤ 70			2				EI 120 U/U	-
Ø ≤ 110			3				EI 120 U/U	-

PYRO-SAFE® Flammotect OSI

3.4.6 Non-combustible pipes - section insulation made of lamella mat "KLIMAROCK"

- Depending on pipe outer diameter, additional protective insulation consisting of mineral fibre mats may be necessary.
- The sectional insulation must be positioned so that it protrudes 50 mm on the opposite side.
- The insulation must be fixed with tension straps or wire.

3-layer design in plasterboard walls or solid walls

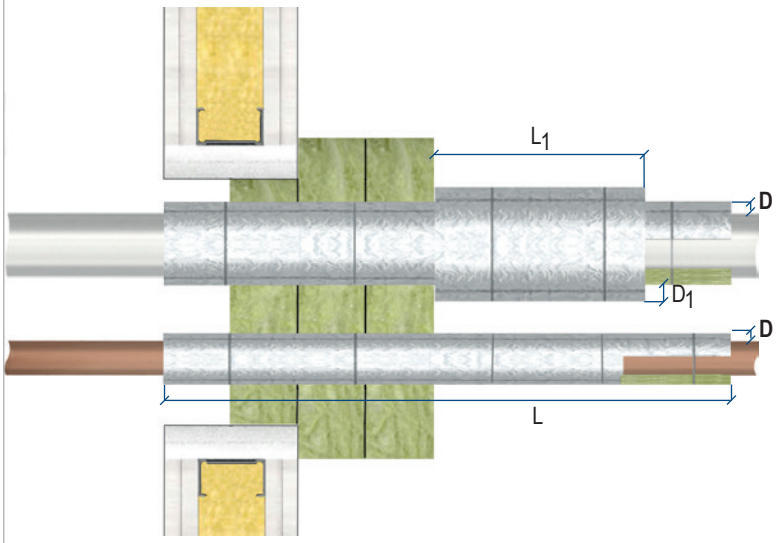

Component, penetration seal thicknesses and design variants page 7 and page 27

Dimensions in mm

Pipe material	Pipe outer Ø [mm]	Section insulation		Protective insulation		Fire rating	
		Insulation length L [mm]	Insulation thickness D [mm]	Insulation length L [mm]	Insulation thickness D1 [mm]	Wall	Floor
Copper, Steel, stainless steel, Cast iron	Ø ≤ 15.0	≥ 250	≥ 20	-	-	EI 90 / E 120 C/U	-
		∞	≥ 20	-	-	EI 120 C/U	-
	Ø ≤ 42.0	≥ 750	≥ 30	≥ 250	≥ 30	EI 90 / E 120 C/U	-
		∞	≥ 30	≥ 250	≥ 30	EI 120 C/U	-
Steel, stainless steel, Cast iron	Ø ≤ 63.5	≥ 750	≥ 30	≥ 250	≥ 30	EI 60 / E 120 C/U	-
		∞	≥ 30	≥ 500	≥ 30	EI 120 C/U	-
	Ø ≤ 114.3	≥ 1,000	≥ 30	≥ 500	≥ 30	EI 60 / E 120 C/U	-
		∞	≥ 30	≥ 500	≥ 30	EI 120 C/U	-

PYRO-SAFE® Flammotect OSI

3.4.7 Non-combustible pipes - section insulation made of FEF "NH/Armaflex"

- Section insulation consisting of FEF must be routed through the component opening to be sealed.
- The pipes must be wrapped with fire protection wrap PYRO-SAFE® DG-CR 1.5.
- Fire protection wrap PYRO-SAFE® DG-CR 1.5 is coated on one side and equipped with a protective film. This must be removed before the wrap is fixed in position with the coated side pointing inwards and with steel wires.

3-layer design in plasterboard walls or solid walls

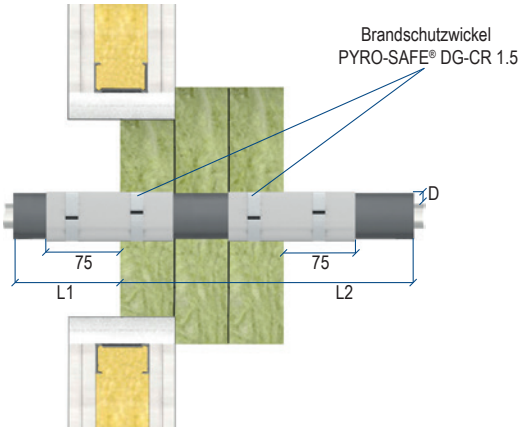

Component, penetration seal thicknesses and design variants page 7 and page 27

Dimensions in mm

Pipe material	Outer pipe-Ø [mm]	Insulation length (L1) / (L2) x Insulation thickness D [mm]	Fire protection wrap PYRO-SAFE® DG-CR 1.5					Fire rating	
			Wrapping width [mm]	No. of wraps [n]	No. of Layers [n]	In the penet-ration sealing system [mm]	In front of the penetration sealing system [mm]	Wall	Floor
Copper, Steel, stainless steel, Cast iron	Ø ≤ 15,0	≥ 550 / ≥ 800 x 13 - 25	125	2	1	50	75	EI 120 C/U	-
	Ø ≤ 28.0	≥ 550 / ≥ 800 x 19 - 25						EI 120 C/U	-
	Ø ≤ 42.0	≥ 550 / ≥ 800 x 19 - 25			2			EI 120 C/U	-

PYRO-SAFE® Flammotect OSI

4. Design in solid floors – installation from below

PYRO-SAFE® Flammotect OSI

4.1 Permissible configuration

4.1.1 Cable / cable bundle / cable support structures / electrical conduits / PE pipes

Electrical cables and lines of all types (including fibre optic cables)

Maximum size of the overall cross-section of the individual cables Ø ≤ 80 mm.

Cable bundles

Up to Ø ≤ 100 mm with cables Ø ≤ 21 mm.

No gusset filling necessary for tightly packed, tied cable bundles.

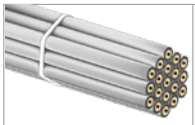

Special duo coax bundle (for TV upgrade)

Up to Ø ≤ 90 mm with cables Ø ≤ 14 mm.

acc. to DIN EN 50117-1 "TELASS CDF 101 (A+) with PE pipes Ø 3.5/5.0 FRNC" from Bedea Berkenhoff & Drebas GmbH or
"oren Hydra-DD 113 (1.1/4.8) FRNC (A+) with PE pipes Ø 3.5/5.0" from Oren Kable.

+ A1-PVC cable (NYM-J 5x 1.5 mm², Ø 14 mm)

+ PVC cable (NYM-J 3x 1.5 mm², Ø 8 mm)

+ Earth cable (H07V-U, 1x 4 mm², Ø 4 mm)

No gusset filling necessary for tightly packed, tied cable bundles.

Cable support structures

Cable trays and cable ladders made of steel poss. with organic coatings if the overall reaction to fire corresponds to at least A2, acc. to EN 13501-1.

Electrical conduit, single made of plastic.

Outer Ø ≤ 32 mm, with/without cable configuration Ø ≤ 21 mm.

Electrical conduit bundle made of plastic.

Outer Ø ≤ 100 mm with individual pipes
Outer Ø ≤ 32 mm, with/without cable configuration, individual cable Ø ≤ 21 mm.

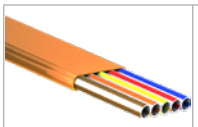

PE pipes "speed pipes" (for glass fibre cables and micro cables)

From Gabocom Systemtechnik GmbH, bundled or individual, with/without glass fibre cable.

Pipe outer Ø [mm]	Max. number [pcs.]	Pipe wall thickness [mm]
≤ 7	24	≤ 1.5
≤ 10	7	≤ 2.0
≤ 12	5	≤ 2.0

PYRO-SAFE® Flammotect OSI

4.1.2 Combustible pipes

Combustible pipes	
Design with fire protection wrap PYRO-SAFE® DG-CR BS up to an outer Ø of ≤ 125 mm for ventilated waste water pipes and closed pipe systems. Non-combustible fluids or non-combustible gases (with the exception of ventilation pipes) may be carried in the pipes.	
PVC-U, PVC-C	
Standards: EN 1329-1, EN 1453-1, EN 1542-1, EN 15493, DIN 8061/8062, EN 1566-1	
Pipe outer Ø [mm]	**Pipe wall thickness [mm]**
≤ 50	1.8 - 3.7
≤ 70	1.9 - 6.0
≤ 80	2.0 - 6.0
≤ 100	2.1 - 8.2
≤ 110	2.2 - 8.2
≤ 125	2.5 - 6.0

4.1.3 Multi-layer composite pipes

Multi-layer composite pipes "HENCO pipes"	
Pipes in a multi-layer composite of aluminium and cross-linked PE from HENCO with an outer diameter of ≤ 63.0 mm	
Without PE foam insulation	
Pipe outer-Ø [mm]	**Pipe wall thickness [mm]**
≤ 12	1.6
≤ 32	3.0
≤ 63	4.5
With PE foam insulation	
Pipe outer-Ø [mm]	**Pipe wall thickness [mm]**
≤ 14	2.0
≤ 32	3.0

• Pipes made of other metals whose heat transfer is lower than steel or copper with a melting point of ≥ 1,049°C may also be sealed.

PYRO-SAFE® Flammotect OSI

4.1.4 Non-combustible pipes

Non-combustible pipes Pipes made of copper, steel, stainless steel or cast steel		
Pipe materials / insulation	**Outer Ø [mm]**	**Pipe wall thickness [mm]**
Copper with non-combustible mineral fibre pipe insulation, e.g. "Klimarock"	≤ 15.0	≥ 0.8
	≤ 21.8	≥ 0.9
	≤ 28.0	≥ 1.0
	≤ 35.0	≥ 1.1
	≤ 42.0	≥ 1.2
	≤ 46.0	≥ 1.3
	≤ 50.0	≥ 1.4
	≤ 54.0	≥ 1.5
	≤ 61.0	≥ 1.6
	≤ 74.9	≥ 1.8
	≤ 88.9	≥ 2.0
Steel, stainless steel, cast material with non-combustible mineral fibre pipe insulation, e.g. "Klimarock"	≤ 63.5	≥ 2.3
	≤ 72.0	≥ 2.4
	≤ 80.4	≥ 2.5
	≤ 88.9	≥ 2.6
	≤ 97.4	≥ 2.7
	≤ 105.8	≥ 2.8
	≤ 114.3	≥ 2.9
Copper with combustible insulation "NH/Armaflex"	≤ 15.0	≥ 0.8
	≤ 21.5	≥ 0.9
	≤ 28.0	≥ 1.0
	≤ 35.0	≥ 1.1
	≤ 42.0	≥ 1.2

4.1.5 HVAC split line combinations

HVAC split line combinations

E.g. "Tubolit DuoSplit" or "Tubolit Split" from Armacell or types with the same parameters.

Double (6-22/8-22 mm) or single copper pipe (6-22 mm) and 9 mm thick PE foam pipe insulation according to EN14313 with optional accompanying pipes (one plastic pipe (U/U) made of PE-HD, outer Ø 25 mm and pipe wall thickness 1.8-3.5 mm, according to EN 1519-1, DIN 8074:2011, DIN 8075:2011 and 4 sheathed lines Ø ≤ 21 mm at zero distance).

PYRO-SAFE® Flammotect OSI

4.2 Distances

Distances

	Individual cables	Cable bundles	Cable support systems	Special duo coax-bundles	Electrical conduits, individual or bundled	Combustible pipes	Multilayer composite pipes	Non-combustible pipes; "lamella mat" insulation	Non-combustible pipes; insulation made of FEF "NH/ Armaflex"	HVAC split line combinations	PE pipes "speed pipes"	Component reveal		
												Top	Bottom	Side
Individual cables	0	0	0	100	50	50	100	0	25	100	0	0		
Cable bundles	0	0	0	100	50	50	100	0	25	100	0	0		
Cable support systems	0	0	0	100	50	50	100	0	25	100	0	0		
Special duo coax bundles	100	100	100	25	100	100	100	100	100	100	100	0		
Electrical conduits, individual or bundled	50	50	50	100	25	100	100	100	100	100	100	100		
Combustible pipes	50	50	50	100	100	100	45	0	0	100	100	0		
Multi-layer composite pipes	100	100	100	100	100	45	100	0	100	100	100	0		
Non-combustible pipes; insulation made of "lamella mat"	0	0	0	100	100	0	0	100	0	100	100	0		
Non-combustible pipes; insulation made of FEF "NH/ Armaflex"	25	25	25	100	100	0	100	0	0	100	100	100		
HVAC split line combinations	100	100	100	100	100	100	100	100	100	100	100	100		
PE pipes "speed pipes"	0	0	0	100	100	100	100	100	100	100	0	0		

PYRO-SAFE® Flammotect OSI

4.3 Design specifications and variants / initial brackets (supports)

- The combined penetration sealing system may be used to close openings without installations (so-called reserve penetration sealing system).
- Depending on the media used, a 2-layer or 3-layer penetration sealing system is required. Media which require a 2-layer penetration seal structure may also be sealed off in 3 layers.
- For installation in plasterboard walls, a circumferential reveal lining is required.
- The penetration seal surface made of mineral fibre boards and their edges must be coated with PYRO-SAFE® FLAMMOTECT-A, dry layer thickness ≥ 0.75 mm.
- The first layer of boards is carefully glued into the component with PYRO-SAFE® FLAMMOTECT-A, the other layers are then positioned on all sides of the component opening with a protrusion of 50 mm and fastened to the each of the preceding boards with coarse thread screws, see screw pattern below.
- In order to facilitate assembly, the mineral fibre boards can be glued using PYRO-SAFE® FLAMMOTECT-A to the component and/or to each other.
- The fire protection measures described on the following pages also apply to retrofitting.

Design variants in solid floors

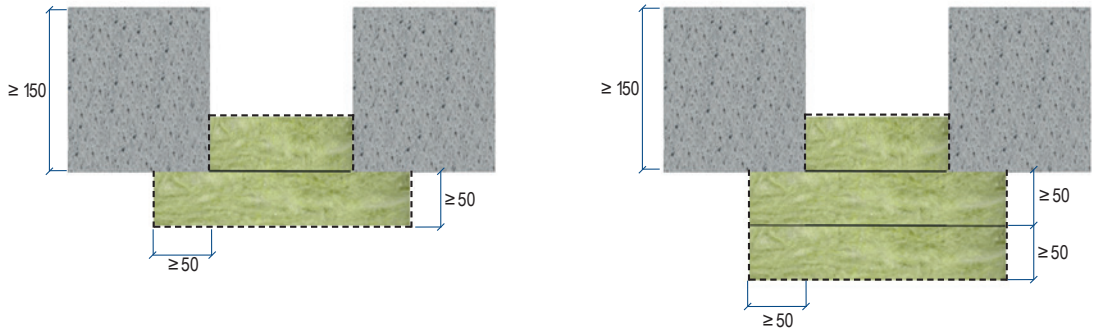

Dimensions in mm

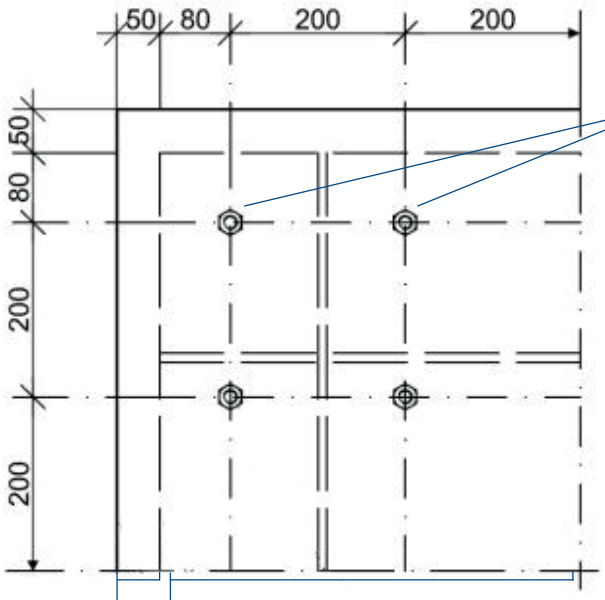

Verschraubung mit Grobgewinde-Trockenbauschrauben

Schrauben-Ø:	8,0 mm
Schraubenlänge:	100 mm
Gewindelänge:	≥ 60 mm

Bauteilöffnung

Plattenüberstand

PYRO-SAFE® Flammotect OSI

Essential parts of the brackets/supports for the installations in front of the wall penetration sealing system must be non-combustible (construction material class DIN 4102-A) and must be configured with a spacing as per the overview on both sides.

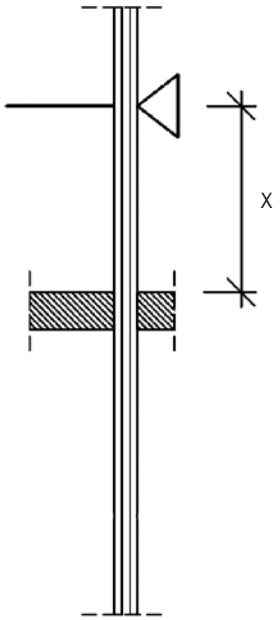

Initial bracket (support) of the installations in front of the wall penetration sealing system made of steel or equivalent.

Initial brackets	
Cables, cable bundles, cable support structures,	≤ 500
Special duo coax bundles	≤ 500
Electrical conduits	≤ 500
Combustible pipes	≤ 750
Multi-layer composite pipes	≤ 750
Non-combustible pipes – section insulation made of mineral fibre	≤ 800
Non-combustible pipes – section installation made of FEF	≤ 700
PE pipes "speed pipes" for glass fibre cables and micro cables	according to manufacturer's specifications
HVAC split line combinations	≤ 500

PYRO-SAFE® Flammotect OSI

4.4 Fire protection measures

4.4.1 Cable / cable bundle / cable support structures

4.4.1.1 2-layer design

- The passage of cables or cable bundles is permitted without and with cable trays.
- Cable bundles may be routed unopened through the penetration sealing system and do not have to be filled internally (gusset) with construction materials if they consist of tightly packed cables which are tightly tied, sewn or welded together and run in parallel.
- The support structures of the cable trays must be designed in such a way that in the event of fire no additional mechanical stress can occur on the penetration sealing system.
- As an alternative to the coating, the passages can be wrapped with fire protection wrap PYRO-SAFE® DG-CR 1.5.
- Fire protection wrap PYRO-SAFE® DG-CR 1.5 is coated on one side and equipped with a protective film. This must be removed before the wrap is fixed in position with the coated side pointing inwards and with steel wires.

2-layer design in solid walls

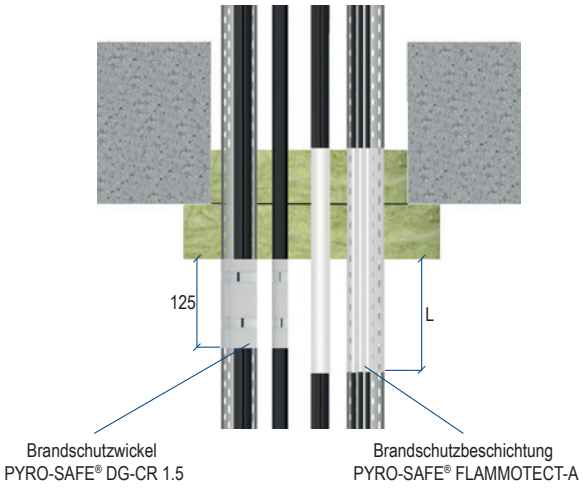

Component, penetration seal thicknesses and design variants page 7 and page 42

Dimensions in mm

	Dimensions [mm]	Fire protection coating PYRO-SAFE® FLAMMOTECT-A			Fire rating	
		Dry layer thickness [mm]	In the penetration sealing system [mm]	In front of the penetration sealing system L [mm]	Wall	Floor
Cables	Ø ≤ 21	≥ 1.0	100	≥ 150	-	EI 120
	Ø ≤ 50	≥ 2.0		≥ 150	-	EI 90
	Ø ≤ 80	≥ 2.0		≥ 150	-	EI 90
Cable bundles	Ø ≤ 100	≥ 1.0		≥ 150	-	EI 120

	Dimensions [mm]	Fire protection wrap PYRO-SAFE® DG-CR 1.5						Fire rating	
		Wrapping width [mm]	No. of wraps [n]	No. of layers [n]	Overlap [mm]	In the penetration sealing system [mm]	In front of the penetration sealing system [mm]	Wall	Floor
Cables	Ø ≤ 21	125	1	1	≥ 45	0	125	-	EI 120
Cable bundles	Ø ≤ 100							-	EI 120

PYRO-SAFE® Flammotect OSI

4.4.1.2 3-layer design

- The passage of cables or cable bundles is permitted without and with cable trays.
- Cable bundles may be routed unopened through the penetration sealing system and do not have to be filled internally (gusset) with construction materials if they consist of tightly packed cables which are tightly tied, sewn or welded together and run in parallel.
- The support structures of the cable trays must be designed in such a way that in the event of fire no additional mechanical stress can occur on the penetration sealing system.
- As an alternative to the coating, the passages can be wrapped with fire protection wrap PYRO-SAFE® DG-CR 1.5.
- Fire protection wrap PYRO-SAFE® DG-CR 1.5 is coated on one side and equipped with a protective film. This must be removed before the wrap is fixed in position with the coated side pointing inwards and with steel wires.

3-layer design in solid walls

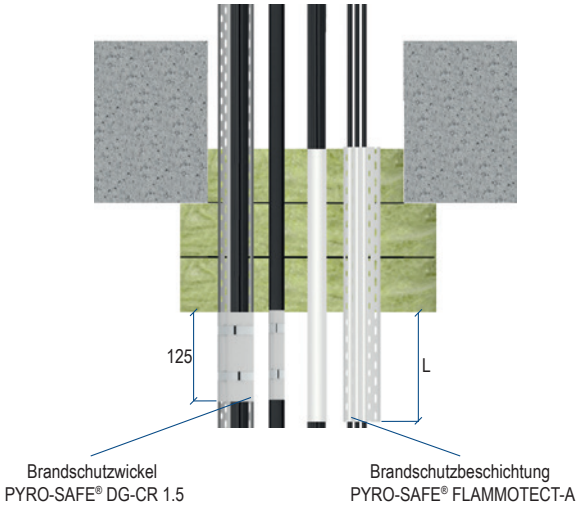

Component, penetration seal thicknesses and design variants page 7 and page 42

Dimensions in mm

	Dimensions [mm]	Fire protection coating PYRO-SAFE® FLAMMOTECT-A			Fire rating	
		Dry layer thickness [mm]	In the penetration sealing system [mm]	In front of the penetration sealing system L [mm]	Wall	Floor
Cables	Ø ≤ 21	≥ 1.0	100	≥ 150	-	EI 120
	Ø ≤ 50	≥ 1.0		≥ 150	-	EI 90
	Ø ≤ 80	≥ 1.0		≥ 150	-	EI 90
Cable bundles	Ø ≤ 100	≥ 1.0		≥ 150	-	EI 120

	Dimensions [mm]	Fire protection wrap PYRO-SAFE® DG-CR 1.5						Fire rating	
		Wrapping width [mm]	No. of wraps [n]	No. of layers [n]	Overlap [mm]	In the penetration sealing system [mm]	In front of the penetration sealing system [mm]	Wall	Floor
Cables	Ø ≤ 21	125	1	1	≥ 45	0	125	-	EI 120
	Ø ≤ 50							-	EI 90
	Ø ≤ 80							-	EI 90
Cable bundles	Ø ≤ 100							-	EI 120

PYRO-SAFE® Flammotect OSI

4.4.2 Special duo coax bundles

- Special duo coax bundles may be routed unopened through the penetration seal and do not have to be filled internally (gusset) with construction materials if they consist of tightly packed cables which are tightly tied, sewn or welded together and run in parallel.
- The special duo coax bundles must be coated with PYRO-SAFE® FLAMMOTECT-A over a length of ≥ 150 mm on the installation side (dry layer thickness ≥ 1.0 mm).

2-layer design in solid walls

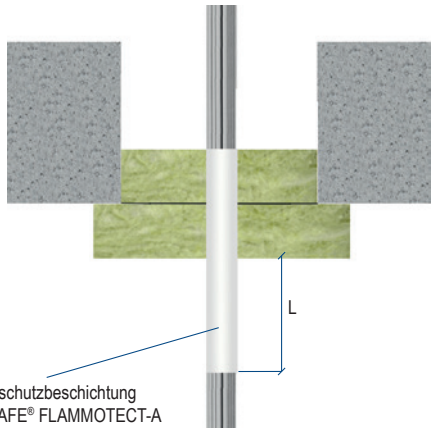

Component, penetration seal thicknesses and design variants page 7 and page 42

Dimensions in mm

	Dimensions [mm]	Fire protection coating PYRO-SAFE® FLAMMOTECT-A			Fire rating	
		Dry layer thickness [mm]	In the penetration sealing system [mm]	In front of the penetration sealing system L [mm]	Wall	Floor
Bundle / cable	Ø ≤ 90 / Ø ≤ 14	≥ 1.0	100	≥ 150	-	EI 120 U/U

PYRO-SAFE® Flammotect OSI

4.4.3 Electrical conduits, individual or bundled

- Electrical conduits can be passed through both individually and in bundled form with/without cable configuration.
- Both ends of the electrical conduits must be wrapped with fire protection wrap PYRO-SAFE® DG-CR 1.5.
- Fire protection wrap PYRO-SAFE® DG-CR 1.5 is coated on one side and equipped with a protective film. This must be removed before the wrap is fixed in position with the coated side pointing inwards and with steel wires.

2-layer design in solid walls

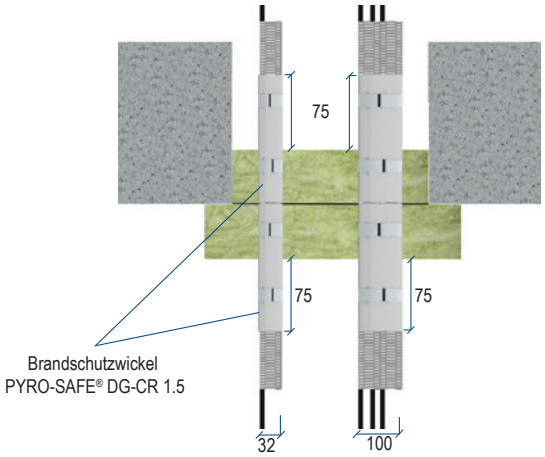

Component, penetration seal thicknesses and design variants page 7 and page 42

Dimensions in mm

Design variant	Dimensions [mm]	Fire protection wrap PYRO-SAFE® DG-CR 1.5						Fire rating	
		Wrapping width [mm]	No. of wraps [n]	No. of layers [n]	Overlap [mm]	In the penetration sealing system [mm]	In front of the penetration sealing system [mm]	Wall	Floor
Electrical conduit made of plastic, single	Ø ≤ 32 (with/without cable Ø ≤ 21)	125	2	2	0	50	75	-	EI 120 U/U
Electrical conduit made of plastic, bundled	Ø ≤ 100 (Single conduits Ø ≤ 32 with/without cable Ø ≤ 21)	125	2	2	0	50	75	-	EI 120 U/U

PYRO-SAFE® Flammotect OSI

4.4.4 PE pipes "speed pipes"

- The PE pipes "speed pipes" must be wrapped at both ends with fire protection wrap PYRO-SAFE® DG-CR 1.5.
- Fire protection wrap PYRO-SAFE® DG-CR 1.5 is coated on one side and equipped with a protective film. This must be removed before the wrap is fixed in position with the coated side pointing inwards and with steel wires.

2-layer design in solid walls

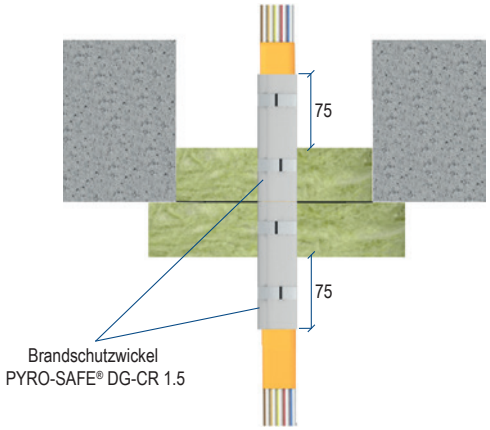

Component, penetration seal thicknesses and design variants page 7 and page 42

Dimensions in mm

Configuration of speed pipes	Wall thickness [mm]	Fire protection wrap PYRO-SAFE® DG-CR 1.5						Fire rating	
		Wrapping width [mm]	No. of wraps [n]	Layers [n]	Overlap [mm]	In the penetration sealing system [mm]	In front of the penetration sealing system [mm]	Wall	Floor
Ø 7.0 mm x 24 pieces	≥ 1.5	125	2	2	0	50	75	-	EI 120 U/U
Ø 10.0 mm x 7 pieces	≥ 2.0								
Ø 12.0 mm x 5 pieces	≥ 2.0								

PYRO-SAFE® Flammotect OSI

4.4.5 Combustible pipes

- The penetration sealing system must only be used on pneumatic conveyor systems, compressed air lines, etc. if the pipe system is shut off in the event of a fire.
- Fire protection wrap PYRO-SAFE® DG-CR BS is coated on both sides and coated with a protective film. This must be removed before the wrap is positioned and fixed with steel wires.

2-layer design in solid walls

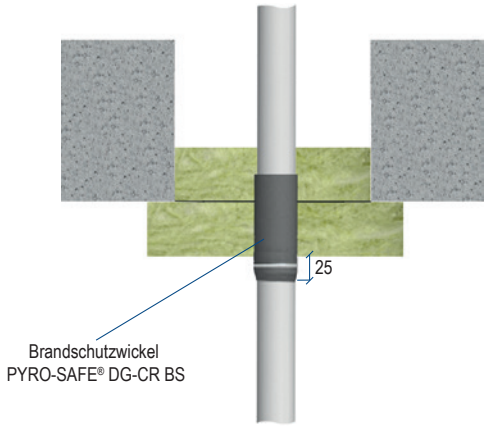

Component, penetration seal thicknesses and design variants page 7 and page 42

Dimensions in mm

Combustible pipes made of PVC-U, PVC-C								
Dimensions [mm]	Intumescent wrap PYRO-SAFE® DG-CR BS						Fire rating	
	Wrapping width [mm]	No. of wraps [n]	No. of layers [n]	Overlap [mm]	In the penetration sealing system [mm]	In front of the penetrati-on sealing system [mm]	Wall	Floor
Ø ≤ 50	100	1	1	0	75	25	-	EI 120 U/U
Ø ≤ 70			2				-	EI 120 U/U
Ø ≤ 110			3				-	EI 120 U/U
Ø ≤ 125			4				-	EI 120 U/U

PYRO-SAFE® Flammotect OSI

4.4.6 Multi-layer composite pipes "HENCO pipes"

- Multi-layer composite pipes with PE foam insulation must be wrapped with fire protection wrap PYRO-SAFE® DG-CR BS and provided with protective insulation consisting of mineral fibre (lamella mat "Klimarock").
- Multi-layer composite pipes with protective insulation made of FEF "Armaflex Protect" may only be installed in 3 layers.

2-layer and 3-layer design in solid floors

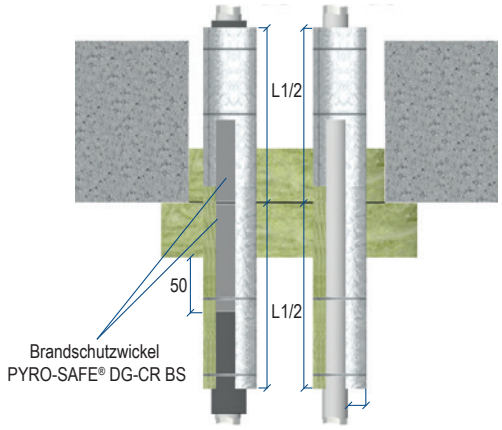

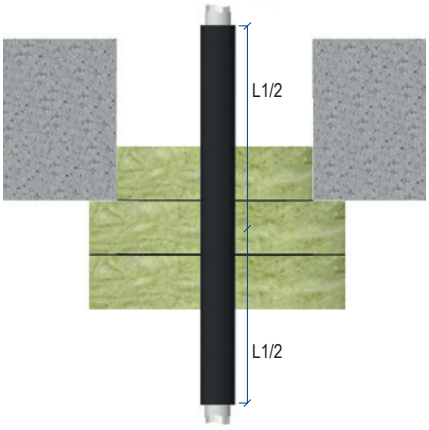

Component, penetration seal thicknesses and design variants page 7 and page 42

Dimensions in mm

2-layer design				
Multi-layer composite pipes "HENCO STANDARD"				
Outer Ø [mm]	**Protective insulation "lamella mat"**		**Fire rating**	
	Length L [mm]	**Thickness D [mm]**	**Wall**	**Floor**
Ø ≤ 12.0	≥ 500	≥ 20	-	EI 120 U/C
Ø ≤ 63.0	≥ 500	≥ 30	-	EI 120 U/C

Multi-layer composite pipes "HENCO STANDARD" with PE foam insulation										
Outer Ø [mm]	**Intumescent wrap PYRO-SAFE® DG-CR BS**						**Protective insulation "lamella mat"**		**Fire rating**	
	Wrapping Width [mm]	**Number of wraps [n]**	**Number of layers [n]**	**Overlap [mm]**	**In the penet-ration sealing system [mm]**	**In front of the penetration sealing system [mm]**	**Length L [mm]**	**Thickness D [mm]**	**Wall**	**Floor**
Ø ≤ 32.0	100	2	1	0	50	50	≥ 500	≥ 20	-	EI 120 U/C

3-layer design				
Multi-layer composite pipes "HENCO STANDARD"				
Outer Ø [mm]	**Protective insulation „Armaflex Protect“**		**Fire rating**	
	Length L [mm]	**Thickness D [mm]**	**Wall**	**Floor**
Ø ≤ 12.0	≥ 480	19	-	EI 120 U/C
Ø ≤ 63.0		25	-	EI 120 U/C

PYRO-SAFE® Flammotect OSI

4.4.7 Non-combustible pipes - section insulation made of lamella mat "KLIMAROCK"

- Depending on pipe outer diameter, additional protective insulation consisting of mineral fibre mats may be necessary.
- The insulation must be fixed with tension straps or wire.

2-layer design in solid walls

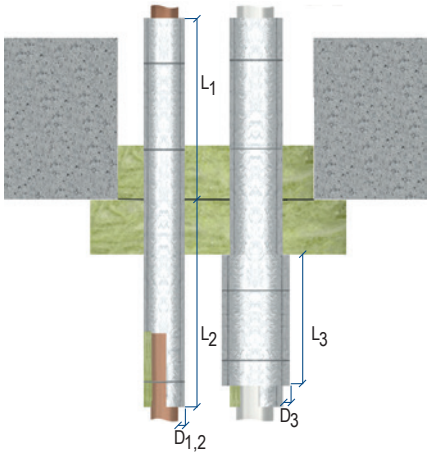

Component, penetration sealing system thicknesses and design variants page 7 and page 42.

Dimensions in mm

Pipe		Section insulation			Protective insulation		Fire rating	
Material	Outer Ø [mm]	Insulation length L1 [mm]	Insulation length L2 [mm]	insulation thickness D1.2 [mm]	Insulation length L3 [mm]	insulation thickness D3 [mm]	Wall	Floor
Copper, Steel, stainless steel, Cast iron	Ø ≤ 28.0	500	500	30	-	-	-	EI 120 C/U
	Ø ≤ 42.0	500	500	40	-	-	-	EI 120 C/U
	Ø ≤ 54.0	∞	950	40	-	-	-	EI 120 C/U
		500	1,000	30	950*	30*	-	EI 120 C/U
	Ø ≤ 88,9	∞	950	40	-	-	-	EI 120 C/U
		500	1,000	30	950	30	-	EI 120 C/U
Steel, stainless steel, Cast iron	Ø ≤ 63.5	∞	950	30	-	-	-	EI 120 C/U
		500	1,000	30	500	30	-	EI 120 C/U
	Ø ≤ 114.3	∞	950	50	-	-	-	EI 120 C/U
		500	1,000	50	950	30	-	EI 120 C/U

* A second layer of protective insulation is required L ≥ 500 mm x D ≥ 30 mm

PYRO-SAFE® Flammotect OSI

4.4.8 Non-combustible pipes - section insulation made of FEF "NH/Armaflex"

- Section insulation consisting of FEF must be routed through the component opening to be sealed.
- The pipes must be wrapped with fire protection wrap PYRO-SAFE® DG-CR 1.5.
- Fire protection wrap PYRO-SAFE® DG-CR 1.5 is coated on one side and equipped with a protective film. This must be removed before the wrap is fixed in position with the coated side pointing inwards and with steel wires.

2-layer design in solid walls

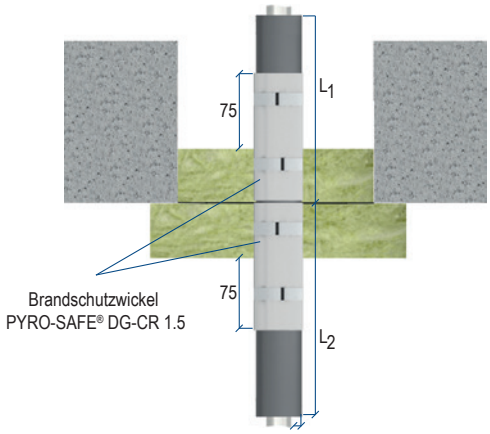

Component, penetration seal thicknesses and design variants page 7 and page 42

Dimensions in mm

Pipe material	Outer pipe-Ø [mm]	Insulation length (L_1) / (L_2) x Insulation thickness D [mm]	Fire protection wrap PYRO-SAFE® DG-CR 1.5						Fire rating	
			Wrapping Width [mm]	No. of Wraps [n]	No. of Layers [n]	Overlap [mm]	In the penetration sealing system [mm]	In front of the penetration sealing system [mm]	Wall	Floor
Copper, Steel, stainless steel, Cast iron	Ø ≤ 15,0	≥ 750 / ≥ 400 x 13 - 24	125	2	1	0	50	75	-	EI 90 / E 120 C/U
		≥ 750 / ≥ 400 x 25							-	EI 120 C/U
	Ø ≤ 28.0	≥ 750 / ≥ 400 x 19 - 25							-	EI 120 C/U
	Ø ≤ 42.0	≥ 750 / ≥ 400 x 19 - 24							-	EI 90 / E 120 C/U
		≥ 750 / ≥ 400 x 25							-	EI 120 C/U

PYRO-SAFE® Flammotect OSI

4.4.9 HVAC split line combinations

- Depending on pipe outer diameter, additional protective insulation consisting of mineral fibre mats may be necessary.
- The insulation must be fixed with tension straps or wire.
- HVAC split line combinations must be sealed in 3 layers.

3-layer design in solid walls

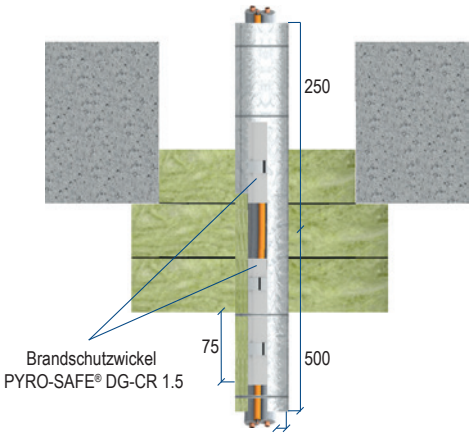

Component, penetration seal thicknesses and design variants page 7 and page 42

Dimensions in mm

Pipe					Number of accompanying cables Ø ≤ 21 mm [n]	Accompa-nying pipe made of PE Ø [mm]	Fire protection wrap PYRO-SAFE® DG-CR 1.5						Fire rating	
Material	Outer Ø [mm]	Wall thickness s [mm]	Insulation [Type]	insu-lation thick-ness T [mm]			Wrapping width [mm]	Number of wraps [n]	Num-ber of Layers [n]	Overlap [mm]	In the pe-netration sealing system [mm]	In front of the penetra-tion sealing system [mm]	Wall	Floor
Copper	6 - 22	1.0	PEF	9	4	≤ 25 (RWD 1.8 - 3.5)	125	2	1	-	50	75	-	EI 120 U/U
	6 - 22 and 8 - 22													

PYRO-SAFE® Flammotect OSI

5. Assembly steps

1. Cleaning the reveal. Coat the cables, bundles, trays in area of penetration seal with PYRO-SAFE® FLAMMOTECT-A

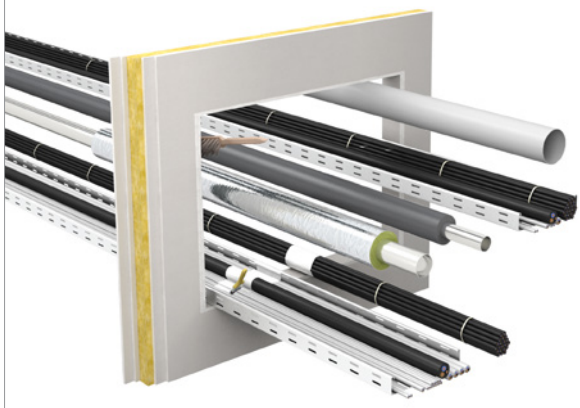

2. PYRO-SAFE® DG-CR 1.5 on "speed pipes", position electrical conduits and non-combustible pipes with FEF. Wrap PYRO-SAFE® DG-CR BS around combustible pipes

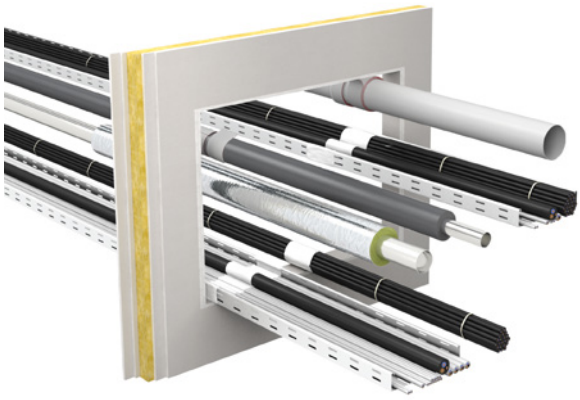

3. PYRO-SAFE® DG-CR 1.5 on "speed pipes", position electrical conduits and non-combustible pipes with FEF. Wrap PYRO-SAFE® DG-CR BS around combustible pipes

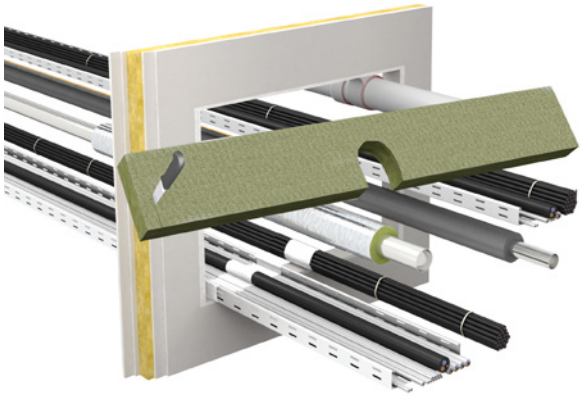

4. Coat the edges and, if necessary, the reverse side with PYRO-SAFE® FLAMMOTECT-A (TSD ≥ 0.75 mm) and insert the boards flush with the surface into the component on the installation side.

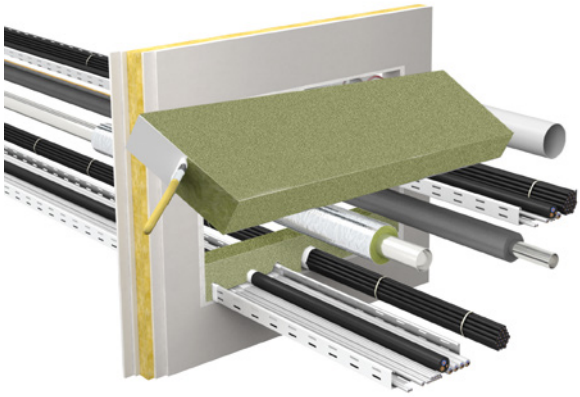

5. Place the second/third layer with a protrusion of ≥ 50 mm on all sides of the component opening and screw to the first/second layer. (see screw pattern)*

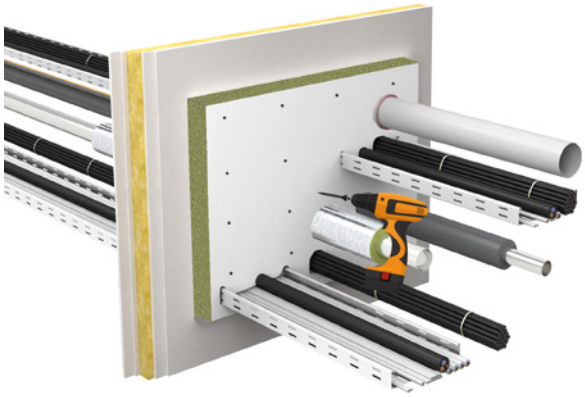

6. Seal remaining openings tightly with mineral wool and/ or close with PYRO-SAFE® FLAMMOTECT-A.

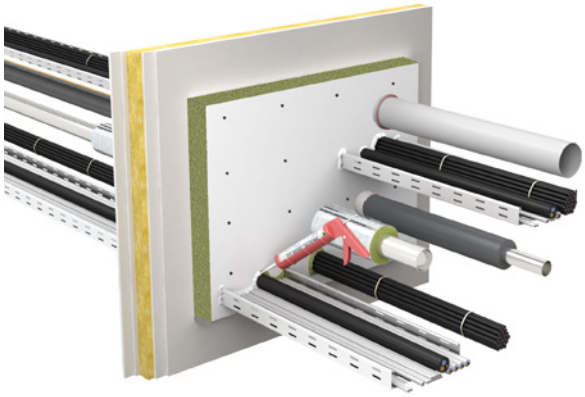

*For easier assembly, the mineral fibre boards can be bonded to the component or to each other with PYRO-SAFE® FLAMMOTECT-A.

PYRO-SAFE® Flammotect OSI

7. Coat cables, cable bundles, cable support structures and special duo coax bundles with PYRO-SAFE® FLAMMOTECT-A.

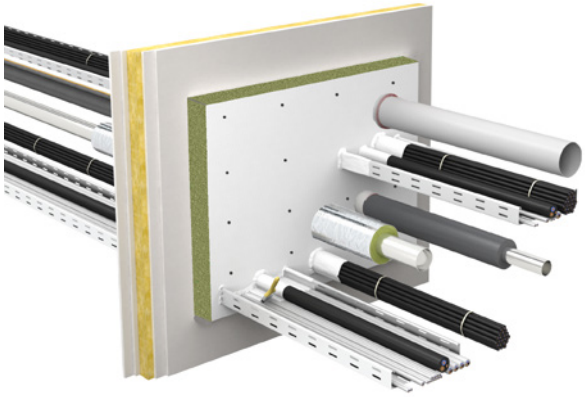

7a. Alternative to coating: wrap cables, cable bundles and cable support structures with PYRO-SAFE® DG-CR 1.5.

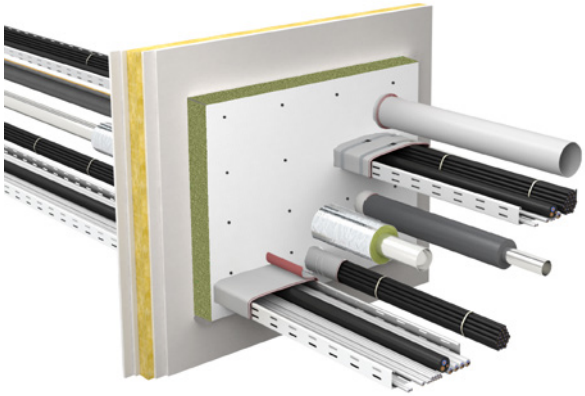

8. Coat the edges of the mineral fibre boards circumferentially with PYRO-SAFE® FLAMMOTECT-A (TSD ≥ 0.75 mm).

9. If necessary, apply protective insulation to non-combustible pipes with lamella mat.

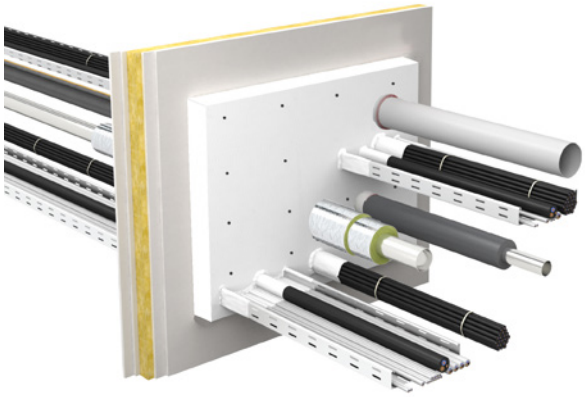

10. Label penetration sealing system. Legibly complete penetration sign and permanently affix it next to or above the penetration seal (not on it!).

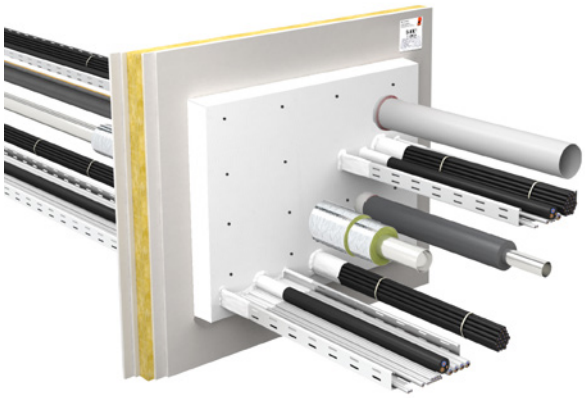

Installation in floor is the same as installation in walls.